CLASSEQ LTD

Spares manual

D500 AB

Table of contents for D500 AB

1. Machine assembly 3
2. Cabinet assembly 5
3. Cabinet external assembly 7
4. Control unit assembly 9
5. Filters – Standard drain pump 11
6. Filters – Gravity Drain 13
7. Cabinet internal assembly 15
8. Fill system 17
9. Rinse tank assembly 6kW 19
10. Rinse tank assembly 2.6kW (Export only) 21
11. Air break assembly (30011815) 23
12. Rinse and wash system 25
13. Centre boss assembly 27
14. Wash pump assembly (30011810) 29
15. Rinse pump assembly (30011811) 31
16. 500mm Wash arm kit (60003520) 33
17. Drain pump assembly 35
18. Base assembly 37
19. Chemical pump assembly 39
20. Detergent pump assembly (30011805) 41
21. Rinse aid pump assembly (30011806) 43
22. Door assembly 45
23. 500mm SS LCD Top panel assembly 47
24. 500mm SS LCD Top Panel 49
25. 500mm SS LED Top panel assembly 51
26. 500mm SS LED Top panel 53
27. Cable Accessories 55
28. Accessories 57
29. Mains cables 57

1. Machine assembly

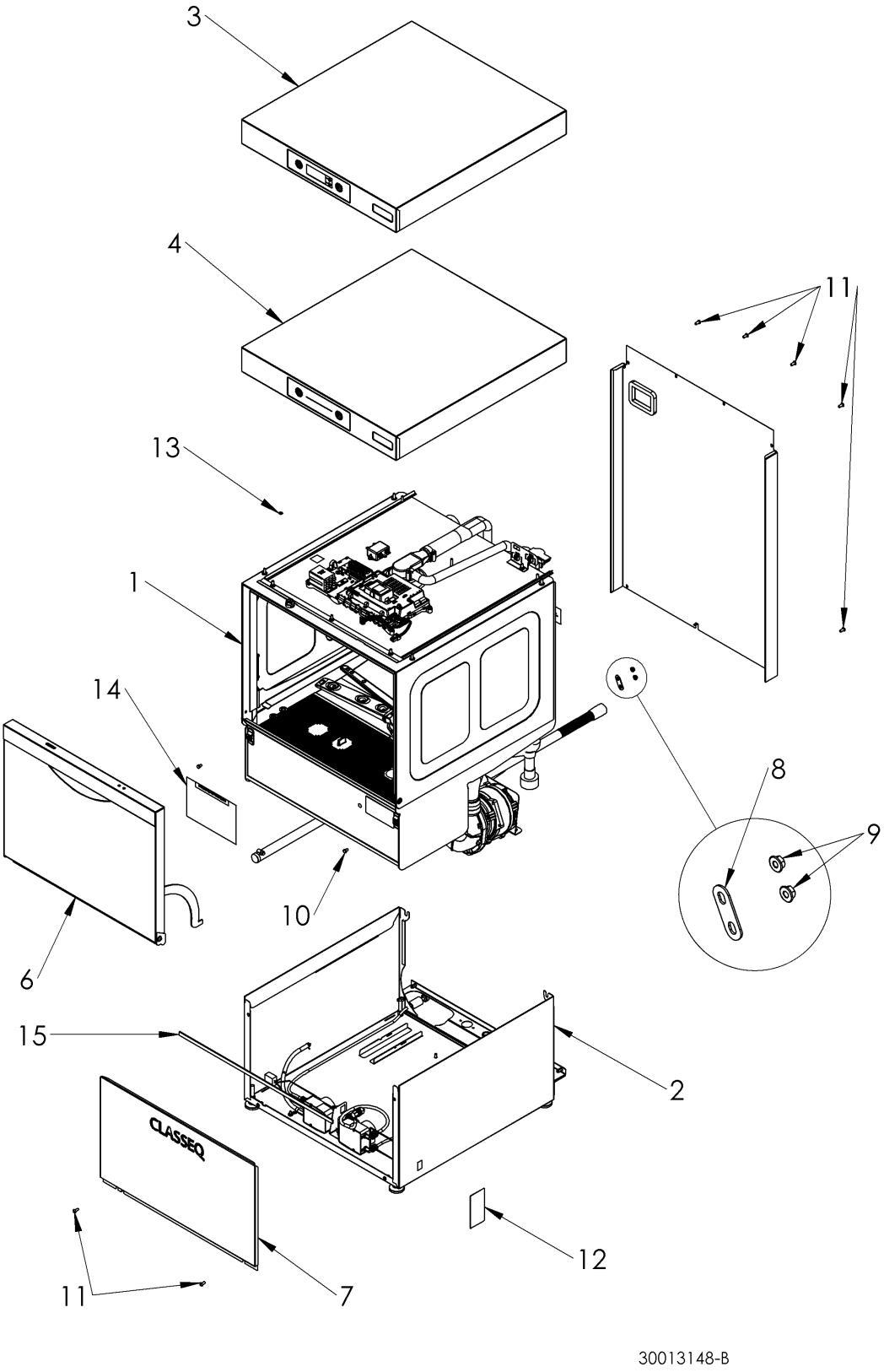

1. Machine assembly – BOM

Item	Description	Part number	QTY.	Note
1	500 AB Cabinet assembly Glass		1	
2	500mm base assembly		1	
3	500mm SS LCD top panel assembly	30012359	1	Optional
4	500mm SS LED top panel assembly	30012339	1	
5	Rear panel assembly - 500mm SS AB	30013139	1	
6	500mm door assembly	30012338	1	
7	500mm Bottom front panel	30011397	1	
8	Bracket - cabinet to base	30001833	2	
9	M5 Flange nut (DIN 6923)	30001186	4	
10	M5 x 8 hex head screw (ISO 4017)	30001124	2	
11	M5 x 12 Hex socket button head screw	30006300	8	
12	Rating plate		2	
13	Earth sticker	30008786	3	
14	Document enclose envelope		1	
15	Foam seal	30011418	1	

2. Cabinet assembly

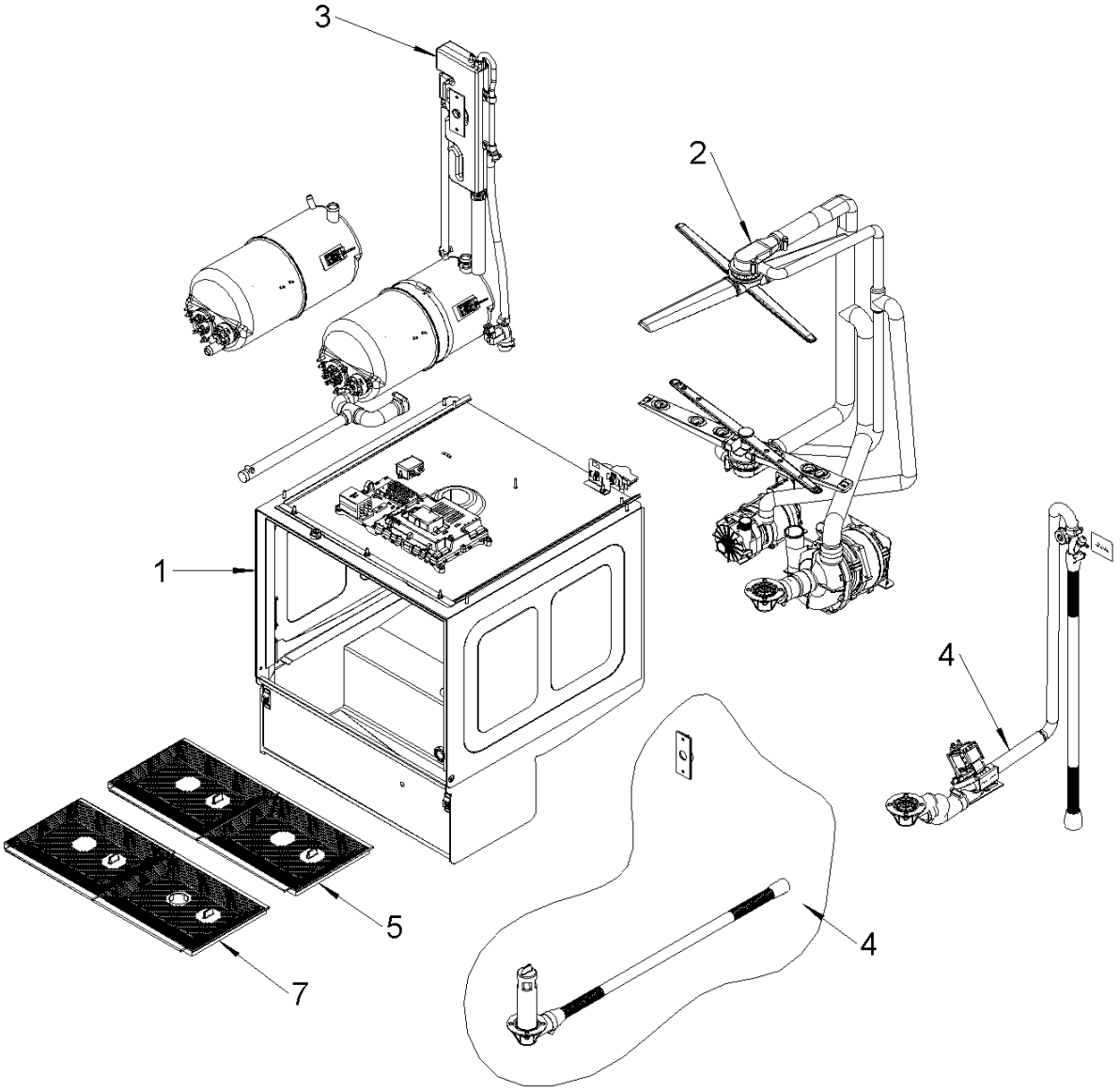

30013152-A

2. Cabinet assembly – BOM

Item	Description	Part number	QTY.	Note
1	500mm AB cabinet external assembly		1	
2	500mm AB/WS Wash/rinse system		1	
3	500mmAB fill system		1	
4	500mm standard drain pump system	30012337	1	
5	500mm Primary filter kit - Pumped drain - Standard	30012364	1	For pump drain machines only
6	500mm gravity drain assembly	30012440	1	
7	500mm Primary filter kit - Gravity drain	30012381	1	For gravity drain machines only

3. Cabinet external assembly

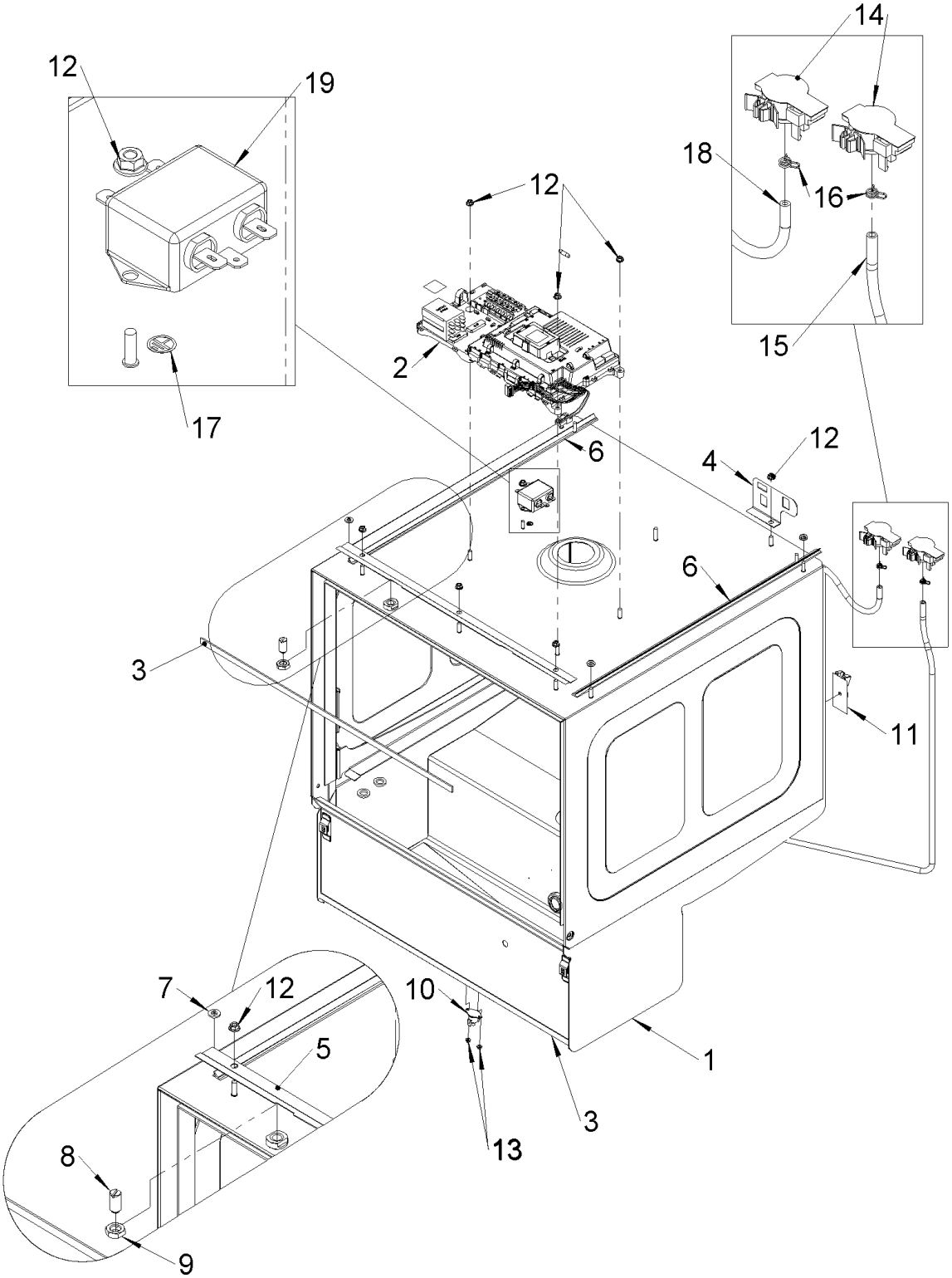

30012314-B

3. Cabinet external assembly – BOM

Item	Description	Part number	QTY.	Note
1	500mm Standard wash cabinet - internal assembly		1	
2	Control unit assembly - 500mm 6kW Premium		1	
3	Foam seal	30011418	2	
4	Air pressure sensor bracket	30011625	1	
5	500mm front water ingress plate	30011649	1	
6	Side water management seal - 500mm	30012006	2	
7	M5 Press nut	30011807	4	
8	Ball catch - M12	30001064	1	
9	M12 Thin nut	30001070	1	
10	Overheat stat 1 Pole 85°C	30007917	1	
11	Thermal sensor kit	30002179	1	
12	M5 Flange nut (DIN 6923)	30001186	8	
13	M3 Flange nut (DIN 6923)	30001171	2	
14	Pressure sensor	3126044	2	
15	Wash APS Tube - 400 / 500	30014330	1	
16	Spring Clip - Ø7.8mm to Ø8.3mm	30001083	4	
17	Earth sticker	30008786	1	
18	500mm WS rinse APS tube	30011890	1	
19	UC Mains filter	30012203	1	

4. Control unit assembly

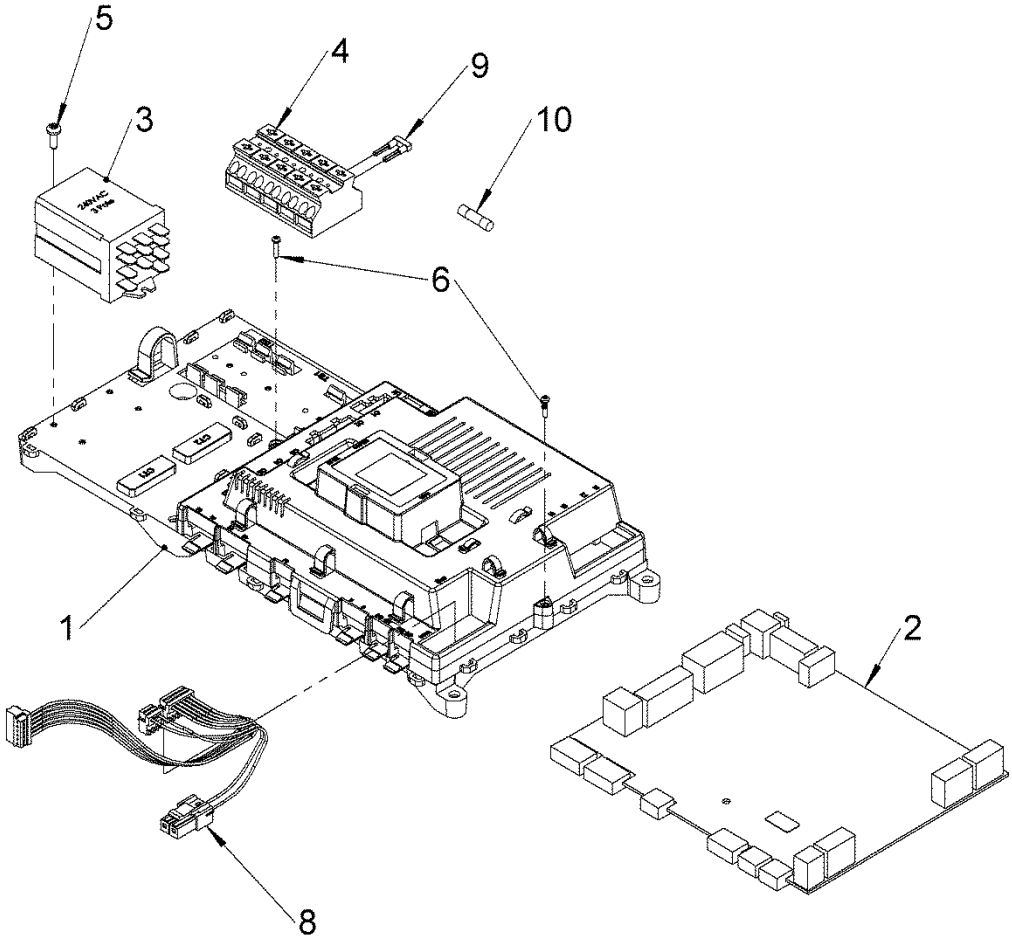

30012345-B

4. Control unit assembly – BOM

Item	Description	Part number	QTY.	Note
1	Control board enclosure assembly	30012023	1	
2	ZSE mini full assembly	30012356	1	
3	3 Pole Change Over relay	30000984	1	
4	Terminal Block - 5 Pole - Grip Type	30001146	1	30A and 3 phase machines
5	3.5x10mm posi pan head PT screw	30011825	1	
6	2.5x10mm PT screw	30011824	2	
7	Wiring harness - 500mm 13A/30A/3P	30011845	1	30A and 3 phase machines
8	Wiring harness - 350/400/500 UI/Door	30011863	1	
9	WAGO 5 pole jumping bar	30008142	1	Refer wiring diagram for quantity
10	4 Amp Fine Fuse ZSE	3111123	1	

5. Filters – Standard drain pump

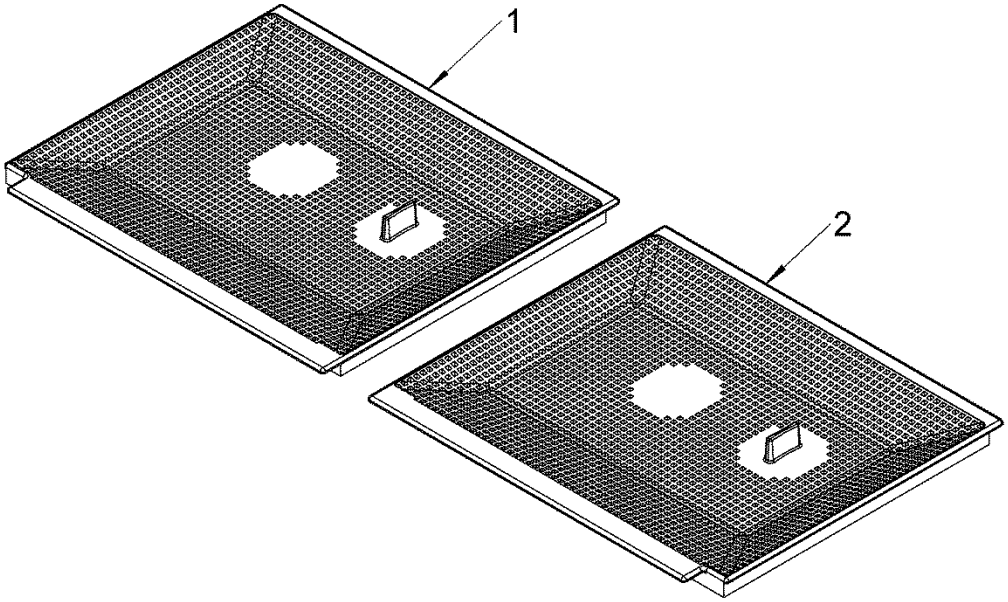

30012364-A

5. Filters – Standard drain pump – BOM

Item	Description	Part number	QTY.	Note
1	Wash Filter LH - 500mm	30000946	1	
2	Wash filter RH - 500mm - Drain Pump	30000945	1	

6. Filters – Gravity Drain

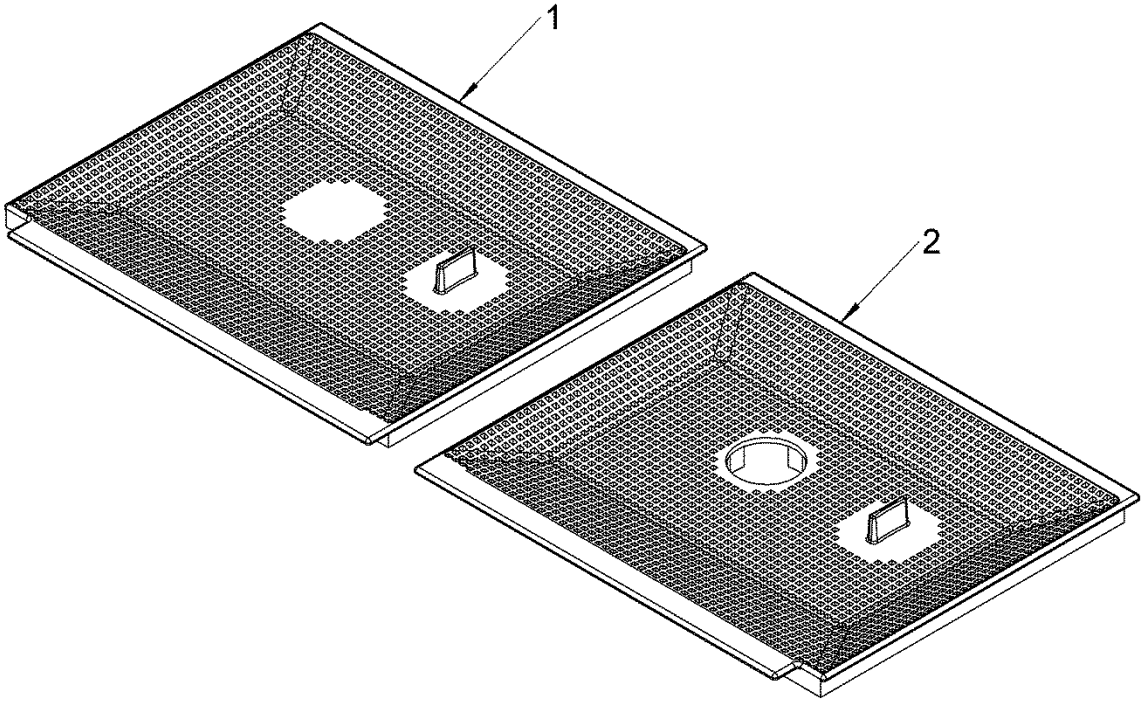

30012381-A

6. Filters – Gravity Drain – BOM

Item	Description	Part number	QTY.	Note
1	Wash Filter LH - 500mm	30000946	1	
2	Wash filter RH - 500mm - GD	30000944	1	

7. Cabinet internal assembly

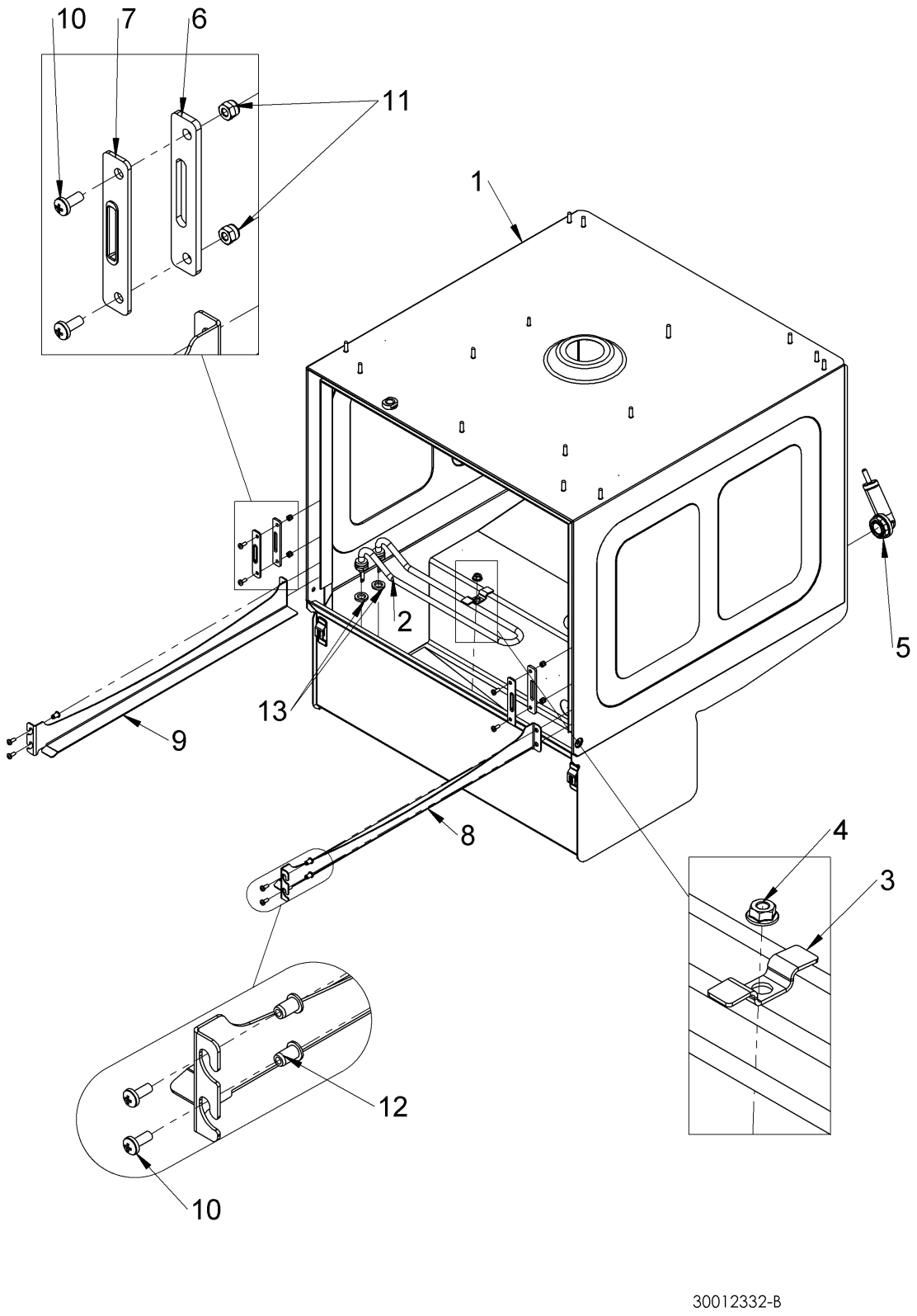

7. Cabinet internal assembly – BOM

Item	Description	Part number	QTY.	Note
1	500mm Std. Cabinet assembly		1	Not available as a spare
2	2kW Wash element	30000975	1	Includes 2x Washers & 2x M12 fine thread thin nut
3	Wash Element Retaining Bracket	30006126	1	
4	M6 Flange nut (DIN 6923)	30001848	1	
5	Kit air pressure chamber	60003525	1	
6	Plate - Door stop	30001062	2	
7	Door Inlay	30001061	2	
8	500 RH Basket ramp	60005321	1	
9	500 LH Basket ramp	60005322	1	
10	M4 x 10mm Posi pan head screw	30006293	8	
11	M4 Nylock nut (ISO 7040)	30001172	4	
12	Round nutserts	30001075	4	
13	Wash element fibre washer 19mmx3mm	30014272	2	For wash element

8. Fill system

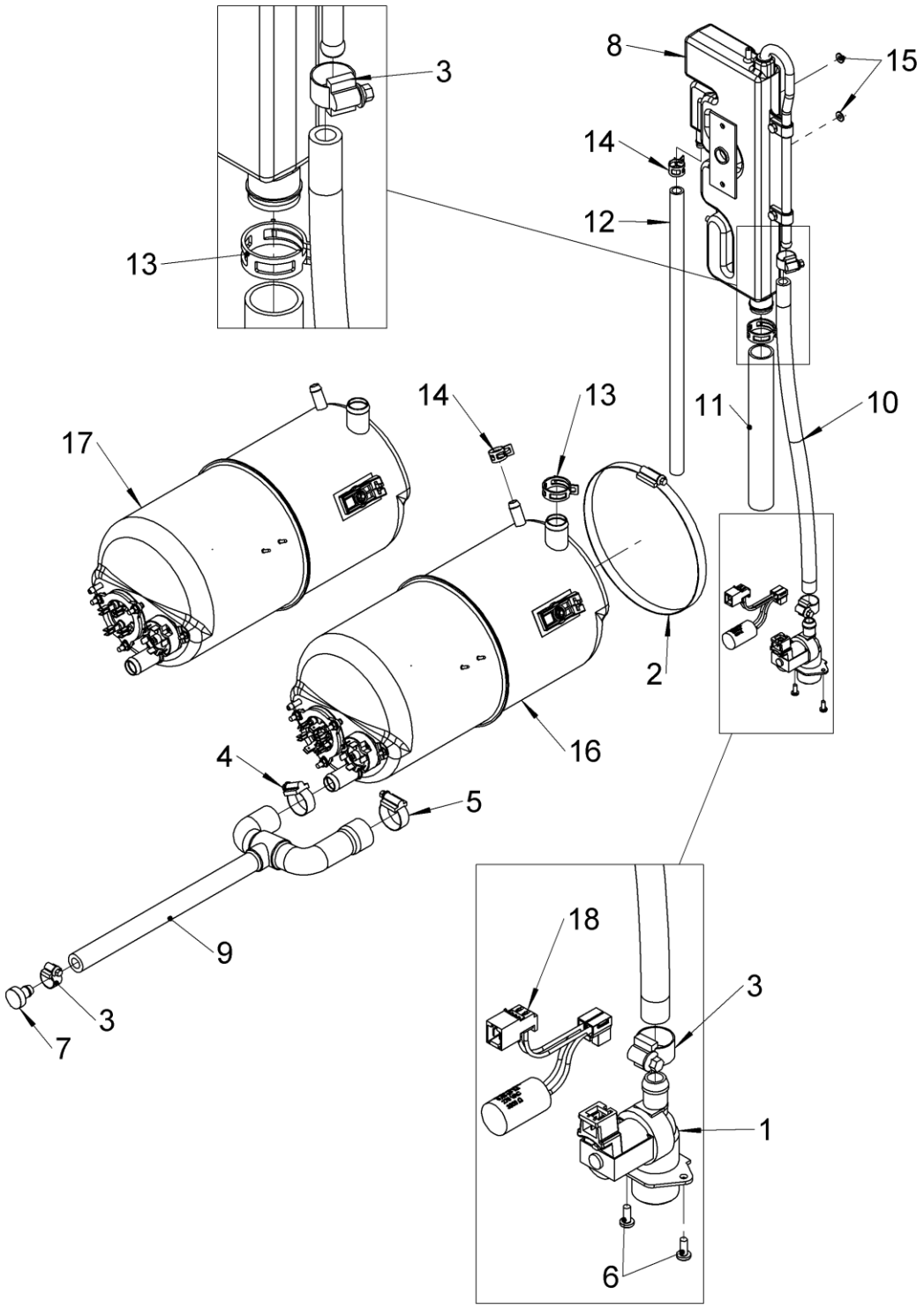

8. Fill system – BOM

Item	Description	Part number	QTY.	Note
1	Solenoid valve - 11L/min	30011638	1	
2	Jubilee clip - 160mm - 180mm	30001113	1	
3	Jubilee Clip - 12mm to 22mm	30001088	3	
4	Jubilee Clip - 20mm to 32mm	30001112	1	
5	Sp. Jubilee Clip - 25mm to 40mm	30013293	1	
6	M4 x 10mm Posi pan head screw	30006293	2	
7	Tube plug	70007962	1	
8	Air gap assembly	30011815	1	
9	Rinse pump inlet hose - 500mm	30011741	1	
10	Solenoid to air gap hose - 500mm	30011748	1	
11	Rinse boiler fill tube - 500mm	30006053	1	
12	Rinse boiler breather - 500mm DUO	30006061	1	
13	Spring band - Ø30mm	30002578	2	
14	Spring band - Ø16mm	30008920	2	
15	M5 Flange nut (DIN 6923)	30001186	2	
16	Rinse boiler assembly - 7.5L - 6kW	30011798	1	
17	Rinse boiler assembly - 7.5L - 2.6kW	30012421	1	Export only
18	RC Filter Connector Kit	30014594	1	

9. Rinse tank assembly 6kW

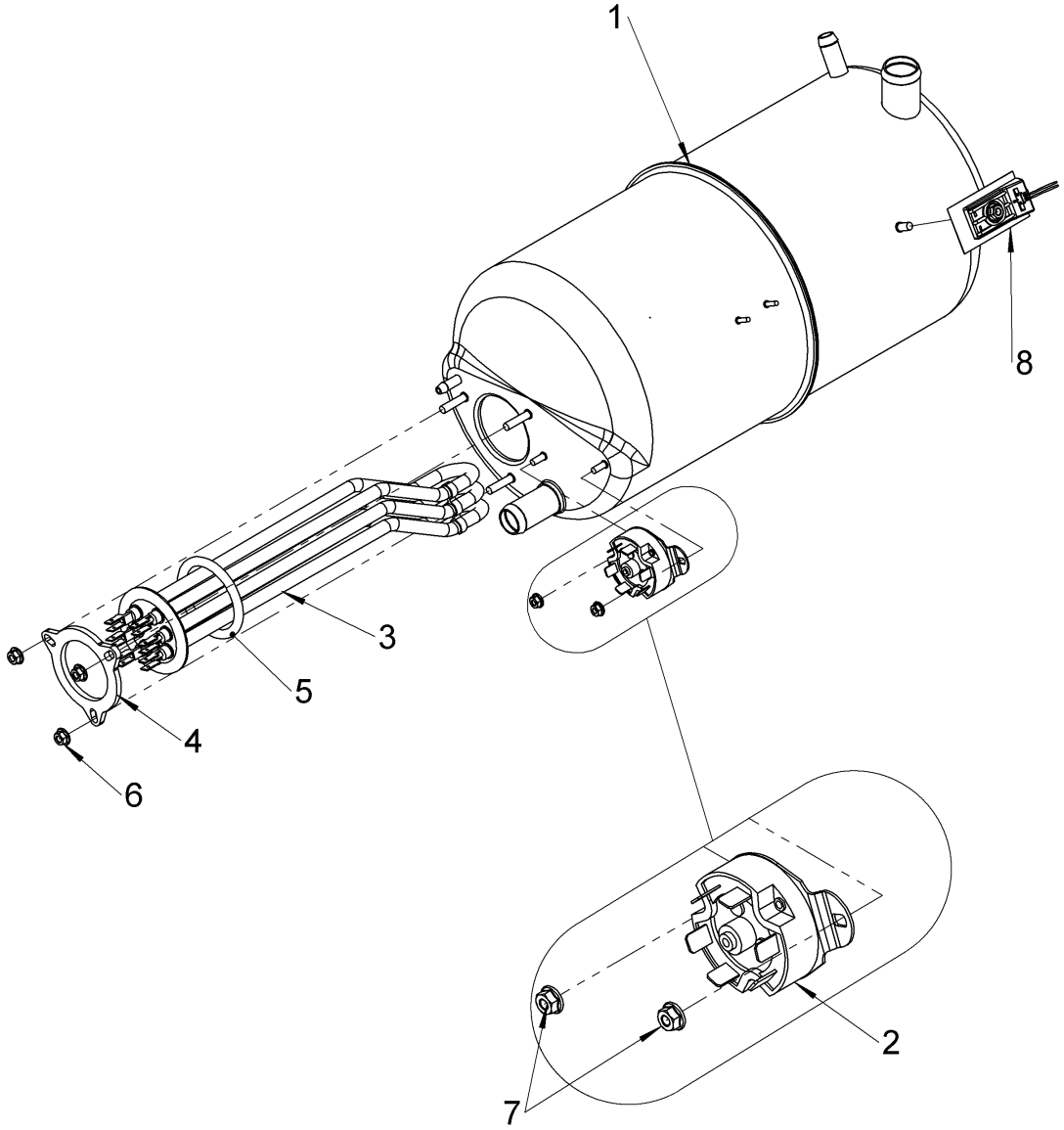

30011798-A

9. Rinse tank assembly 6kW – BOM

Item	Description	Part number	QTY.	Note
1	Rinse boiler - 7.5L	30011839	1	
2	Manual reset thermal trip switch - 3 pole - 95°C	30006090	1	
3	6kW element - no phile	30011827	1	
4	Bracket - rinse element	0117003	1	
5	O-Ring - Ø46 x Ø6	30000947	1	
6	M5 Flange nut (DIN 6923)	30001186	3	
7	M4 Flange nut (DIN 6923)	30006237	2	
8	Kit thermo sensor	30002179	1	

10. Rinse tank assembly 2.6kW (Export only)

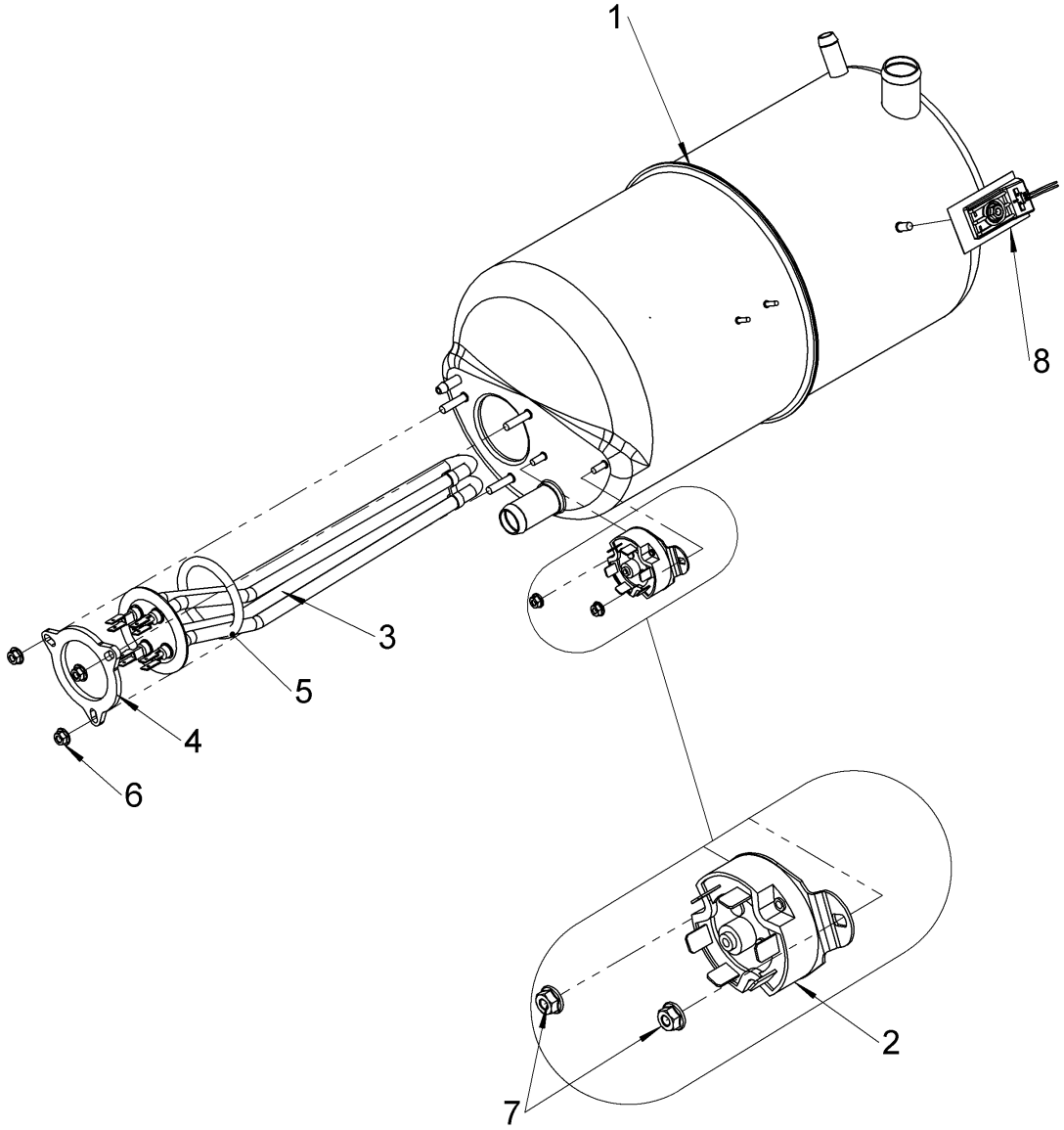

30012421-A

10. Rinse tank assembly 2.6kW (Export only) –BOM

Item	Description	Part number	QTY.	Note
1	Rinse boiler - 7.5L	30011839	1	
2	Manual reset thermal trip switch - 3 pole - 95°C	30006090	1	
3	2.6kW rinse element	30011828	1	
4	Bracket - rinse element	0117003	1	
5	O-Ring - Ø46 x Ø6	30000947	1	
6	M5 Flange nut (DIN 6923)	30001186	3	
7	M4 Flange nut (DIN 6923)	30006237	2	
8	Kit thermo sensor	30002179	1	

11. Air break assembly (30011815)

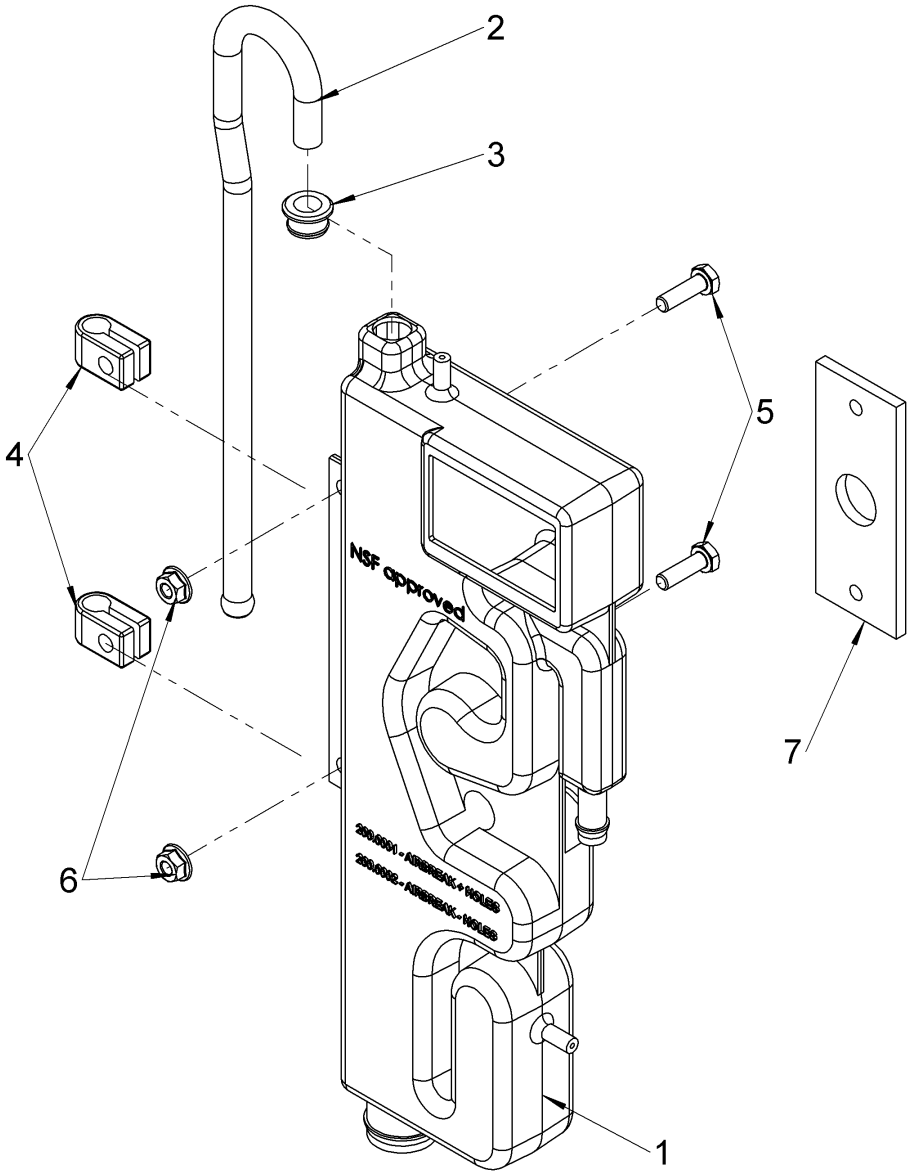

30011815-A

11. Air break assembly – BOM

Item	Description	Part number	QTY.	Note
1	Air break tank	30001078	1	
2	Air break feeder tube	30001079	1	
3	Air break plug	30012160	1	
4	Cable cleat - No 4	30001844	2	
5	M6 x 20 hex head screw (ISO 4017)	30001080	2	
6	M6 Flange nut (DIN 6923)	30001848	2	
7	Air break seal	30012588	1	

12. Rinse and wash system

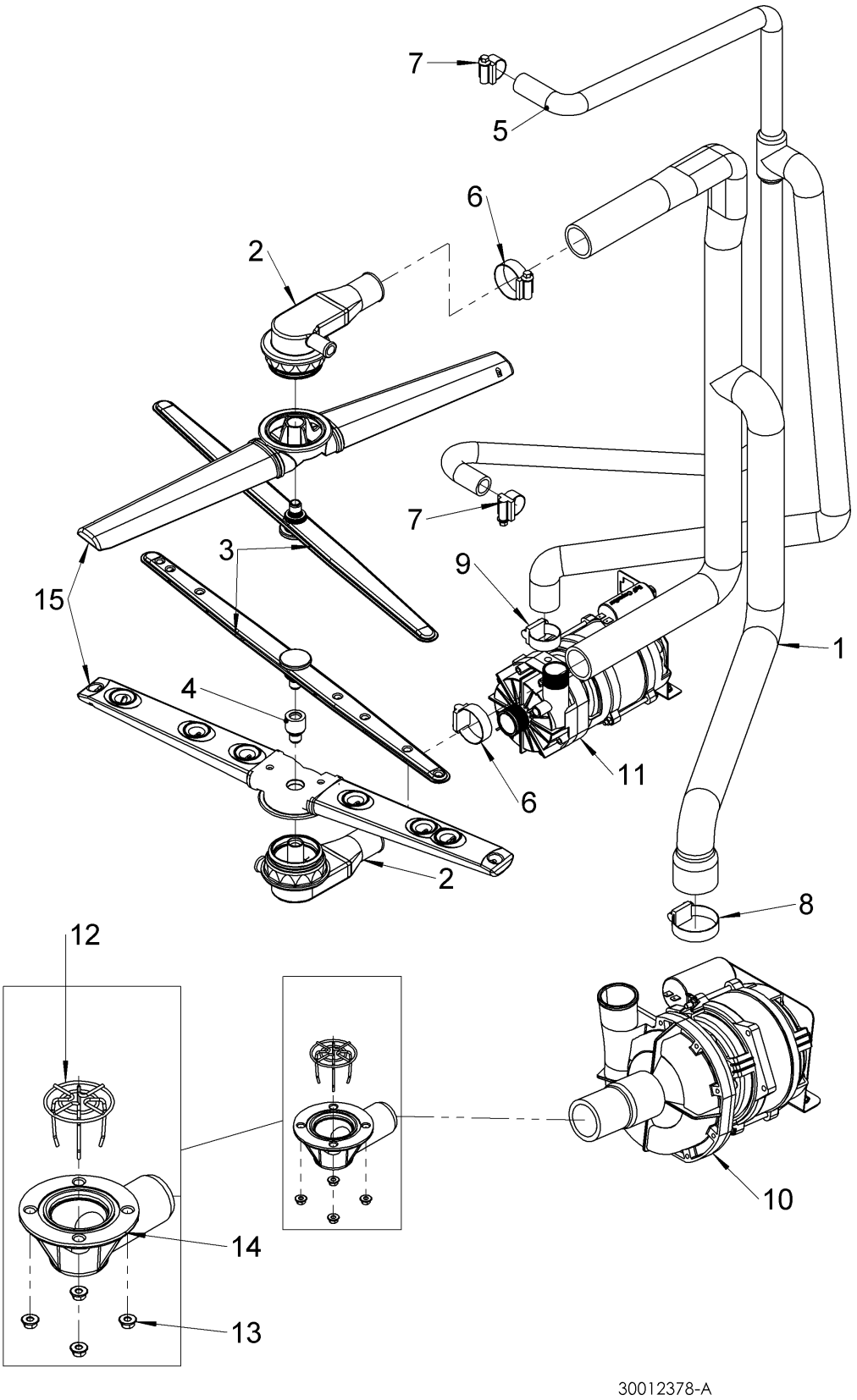

12. Rinse and wash system – BOM

Item	Description	Part number	QTY.	Note
1	Wash Pump Outlet Hose 500mm	60005334	1	
2	Centre boss assembly	30003284	2	
3	Revolving rinse arm assembly - 500mm	60004062	2	
4	Rinse arm extension screw	60005332	1	
5	Rinse System Hose 500mm	60005333	1	
6	Jubilee clip - 32mm to 50mm	30001114	2	
7	Jubilee Clip - 16mm to 27mm	30001799	2	
8	Jubilee clip - 32mm to 50mm	30001114	1	
9	Jubilee Clip - 20mm to 32mm	30001112	1	
10	Wash pump assembly	30011810	1	
11	Rinse pump assembly - 500mm	30011811	1	
12	Secondary filter	30011849	1	
13	M5 Flange nut (DIN 6923)	30001186	4	
14	Wash & Waste outlet manifold kit	30000625	1	
15	Kit rotary arms washing	60003520	2	

13. Centre boss assembly

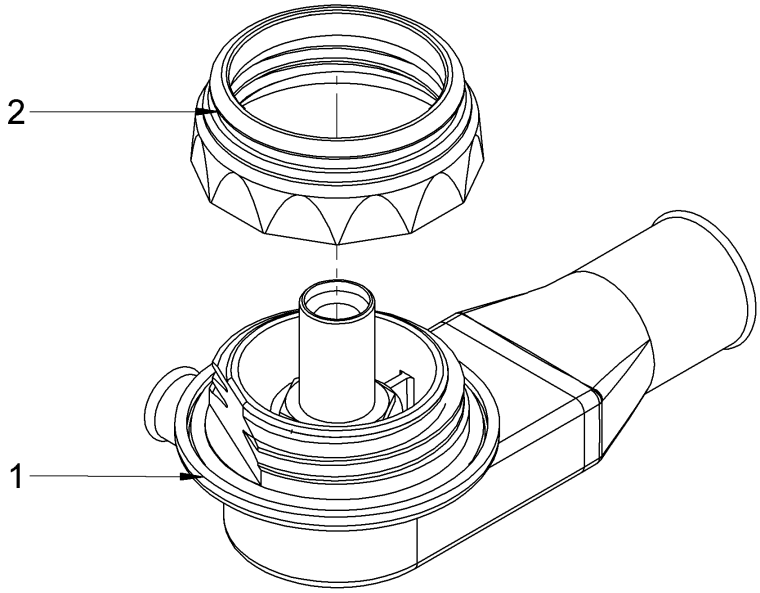

30003284-A

13. Centre boss assembly – BOM

Item	Description	Part number	QTY.	Note
1	Centre boss assembly	30012323	1	
2	Lock nut	60003005	1	

14. Wash pump assembly (30011810)

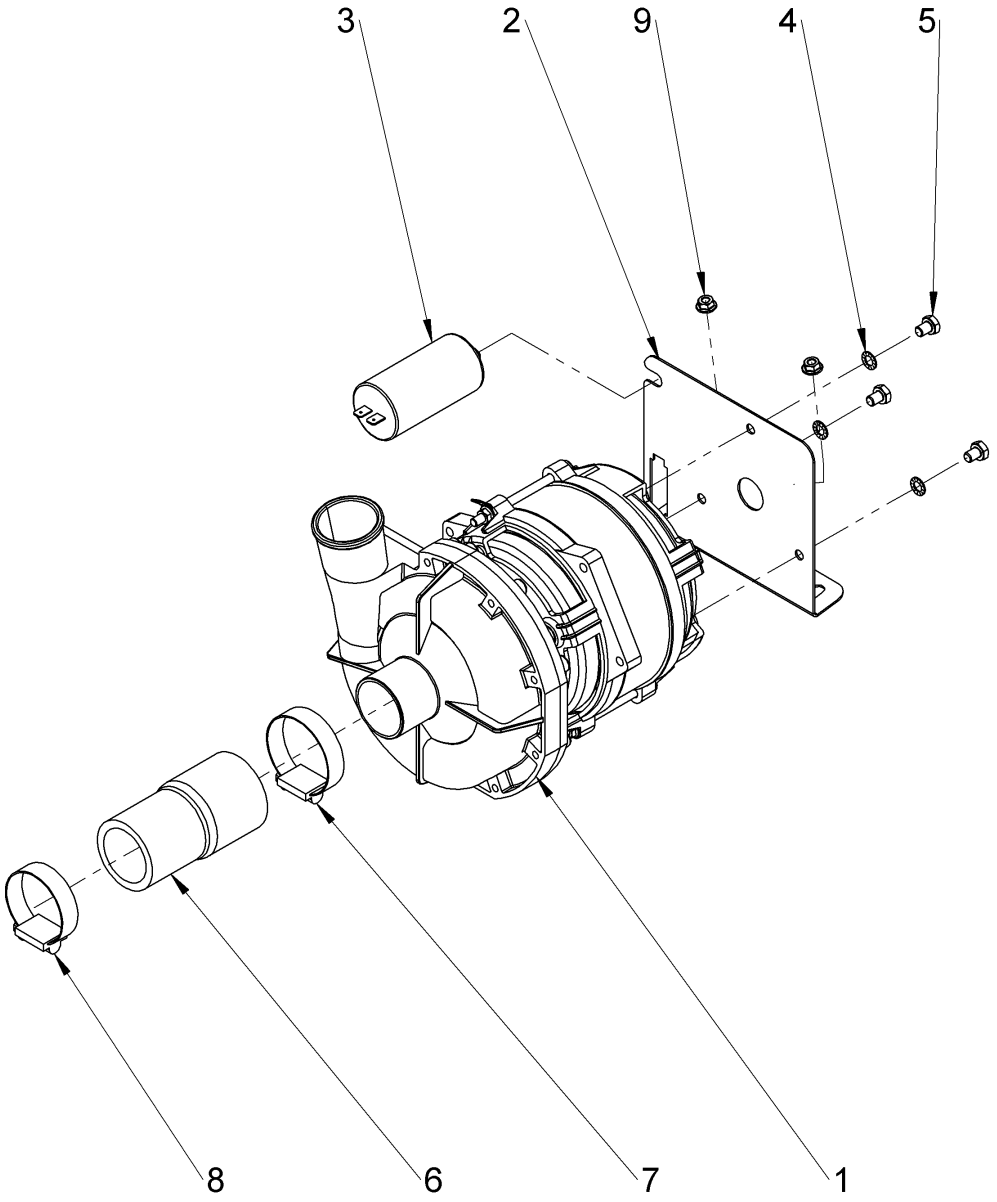

30011810-A

14. Wash pump assembly – BOM

Item	Description	Part number	QTY.	Note
1	Wash pump 0.58kW	30011817	1	
2	Wash pump bracket - 0.58kW	30011675	1	
3	12.5µF Capacitor	30011582	1	Includes washer & nut
4	M6 Serrated washer	30007939	3	
5	M6 x 8 hex head screw (ISO 4017)	30011209	3	
6	Wash pump inlet hose	30001125	1	
7	Jubilee clip - 32mm to 50mm	30001114	1	
8	Jubilee clip - 30mm to 45mm	30001115	1	
9	M5 Flange nut (DIN 6923)	30001186	2	

15. Rinse pump assembly (30011811)

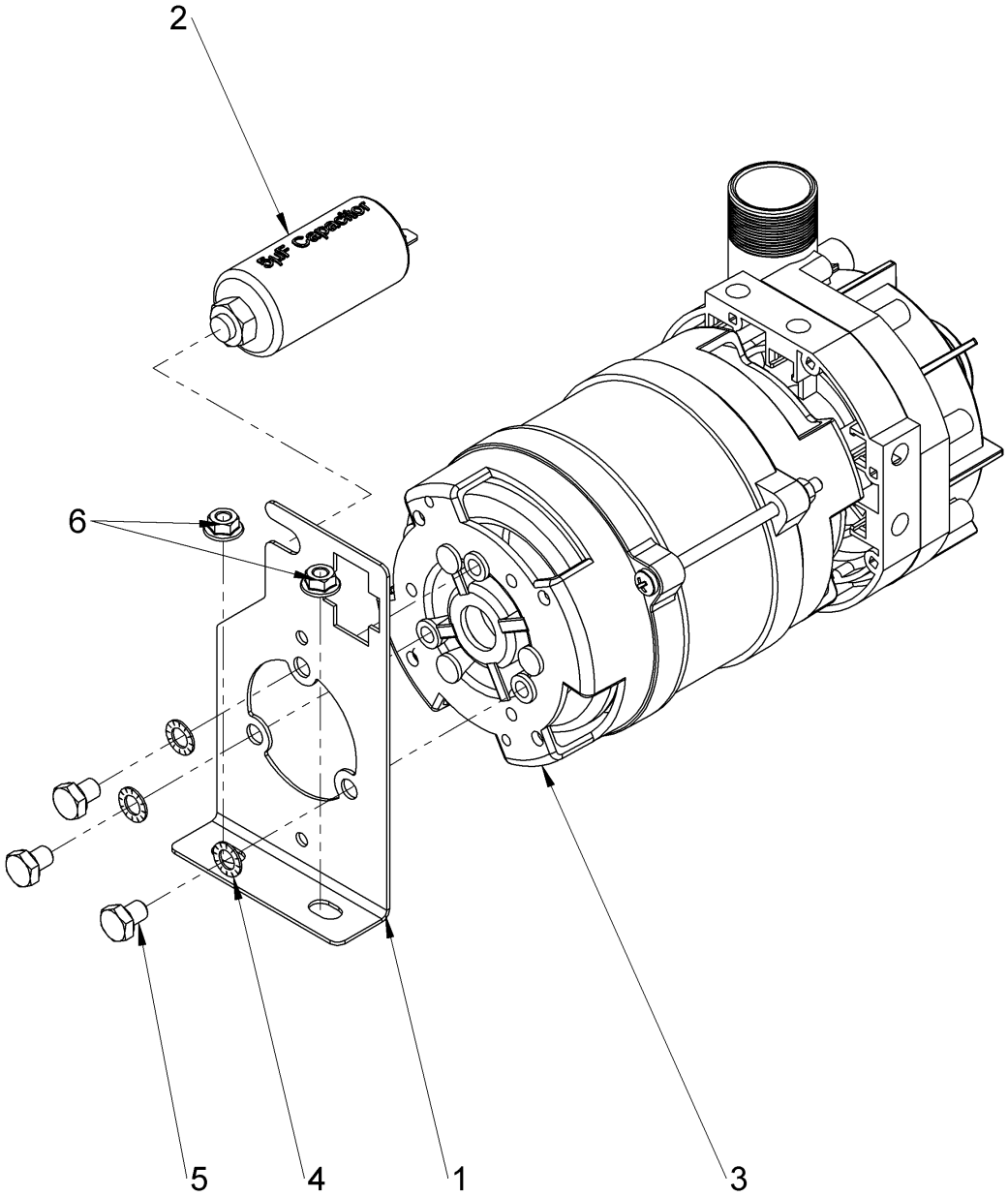

30011811-A

15. Rinse pump assembly – BOM

Item	Description	Part number	QTY.	Note
1	Rinse pump bracket	30011678	1	
2	5µF Capacitor	30011583	1	Includes washer & nut
3	Rinse booster pump - 0.19kW	30011819	1	
4	M6 Serrated washer	30007939	3	
5	M6 x 8 hex head screw (ISO 4017)	30011209	3	
6	M5 Flange nut (DIN 6923)	30001186	2	

16. 500mm Wash arm kit (60003520)

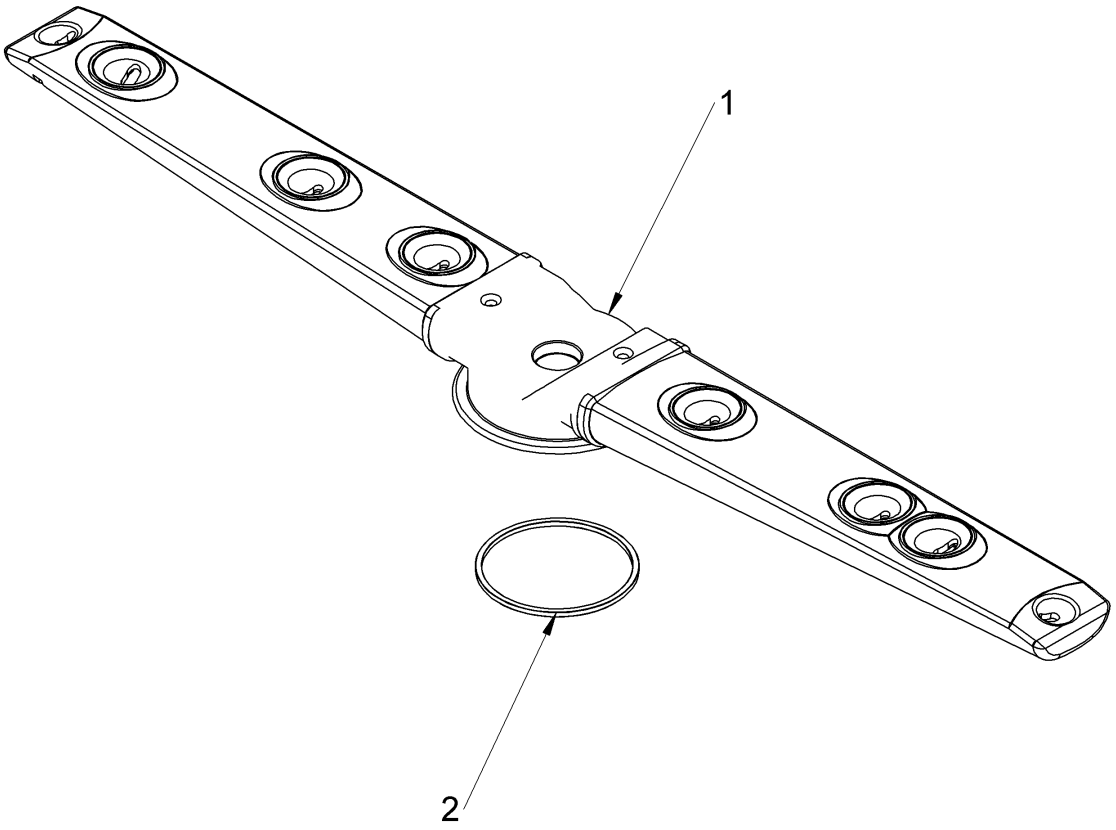

60003520-A

16. 500mm Wash arm kit - BOM

Item	Description	Part number	QTY.	Note
1	Wash Arm 500mm		1	Not available as a spare
2	Seal (turbo ring)	60003021	1	Only on Dishwasher

17. Drain pump assembly

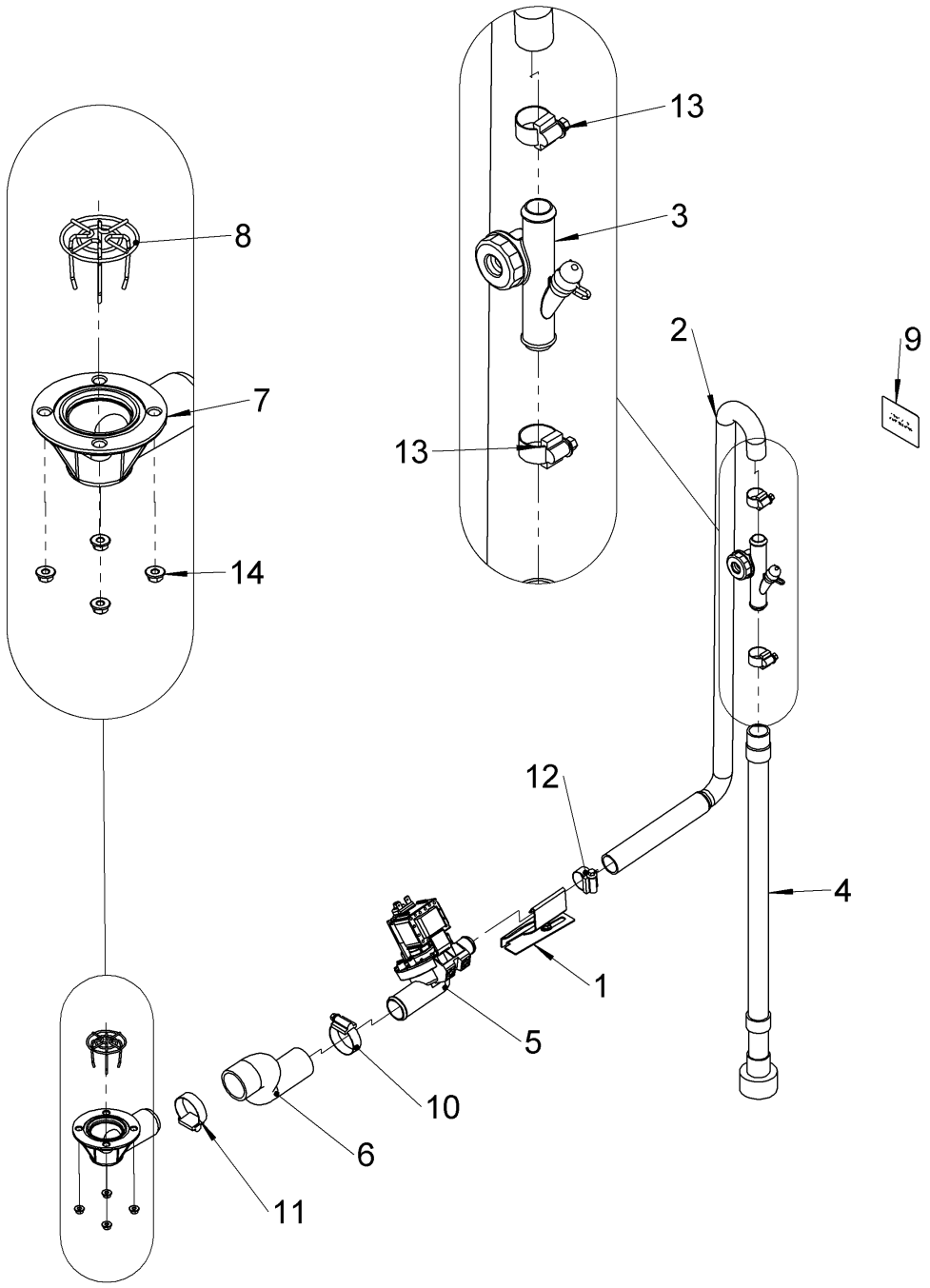

30012337-C

17. Drain pump assembly – BOM

Item	Description	Part number	QTY.	Note
1	Drain pump bracket new	30011624	1	
2	Drain pump outlet hose 500	30011730	1	
3	Kit drain air break	60003514	1	
4	Pump - Drain Hose	30013186	1	After serial number XXXXX-1729
5	Drain pump - Head 90° to flow	30011696	1	
6	Drain pump inlet hose	30011743	1	
7	Wash & Waste outlet manifold kit	30000625	1	
8	Secondary filter	30011849	1	
9	Drain height sticker	30012368	1	
10	Sp. Jubilee Clip - 25mm to 40mm	30013293	1	
11	Jubilee Clip -25mm to 40mm	30001089	1	
12	Jubilee Clip - 16mm to 27mm	30001799	1	
13	Jubilee Clip - 12mm to 22mm	30001088	2	
14	M5 Flange nut (DIN 6923)	30001186	5	

18. Base assembly

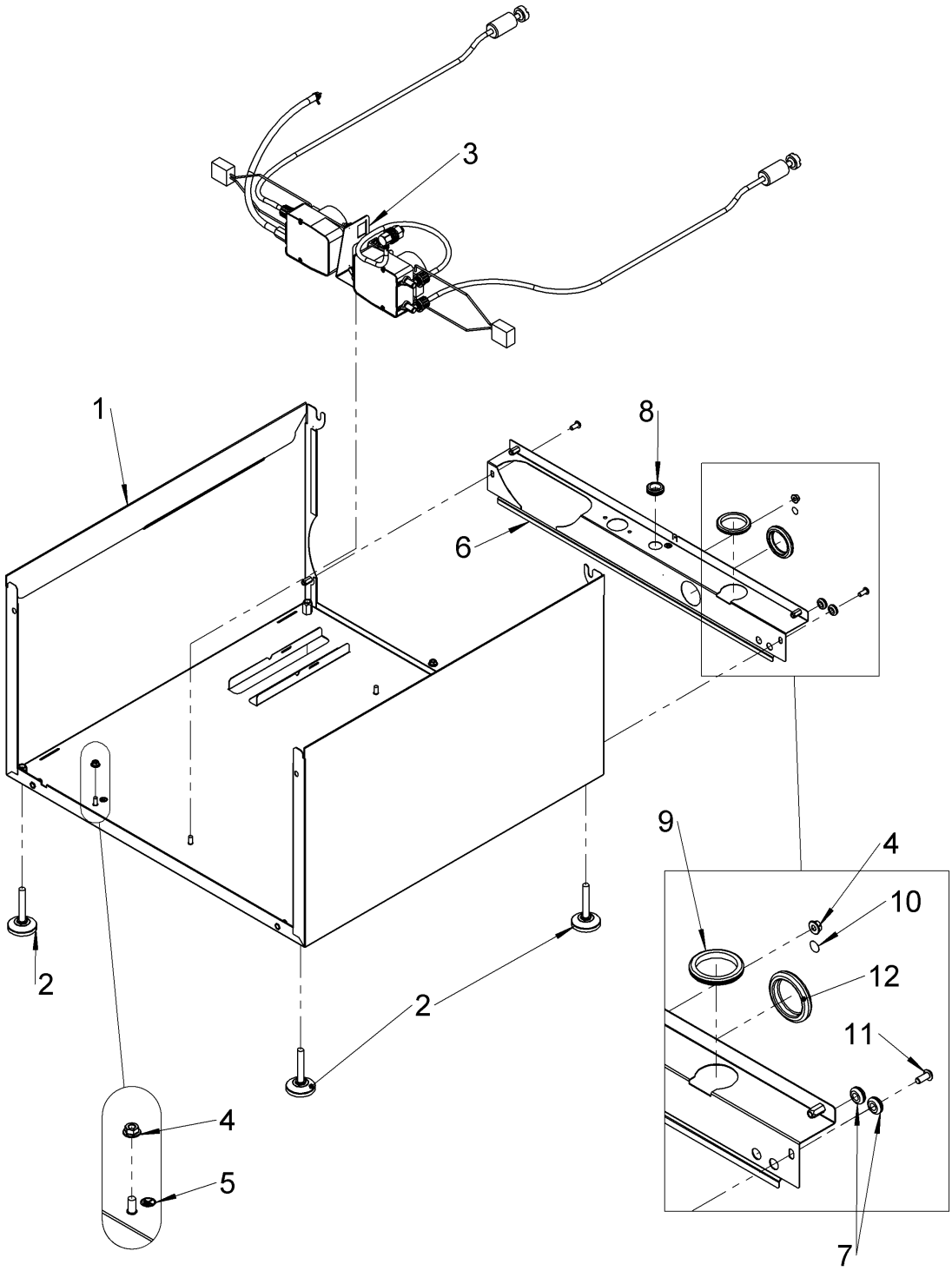

30012341-A

18. Base assembly – BOM

Item	Description	Part number	QTY.	Note
1	500mm Base assembly		1	
2	Adjuster Foot	30001107	4	
3	Chemical pump assembly		1	
4	M5 Flange nut (DIN 6923)	30001186	3	
5	Earth sticker	30008786	3	
6	500mm rear base assembly	30011679	1	
7	Chemical tube grommet	30002141	2	
8	Mains cable grommet	30011630	1	
9	Drain hose grommet	30011631	1	
10	Equipotential bonding sticker	30011891	1	
11	M5 x 12 Hex socket button head screw	30006300	2	
12	Drain blanking grommet	30012167	1	

19. Chemical pump assembly

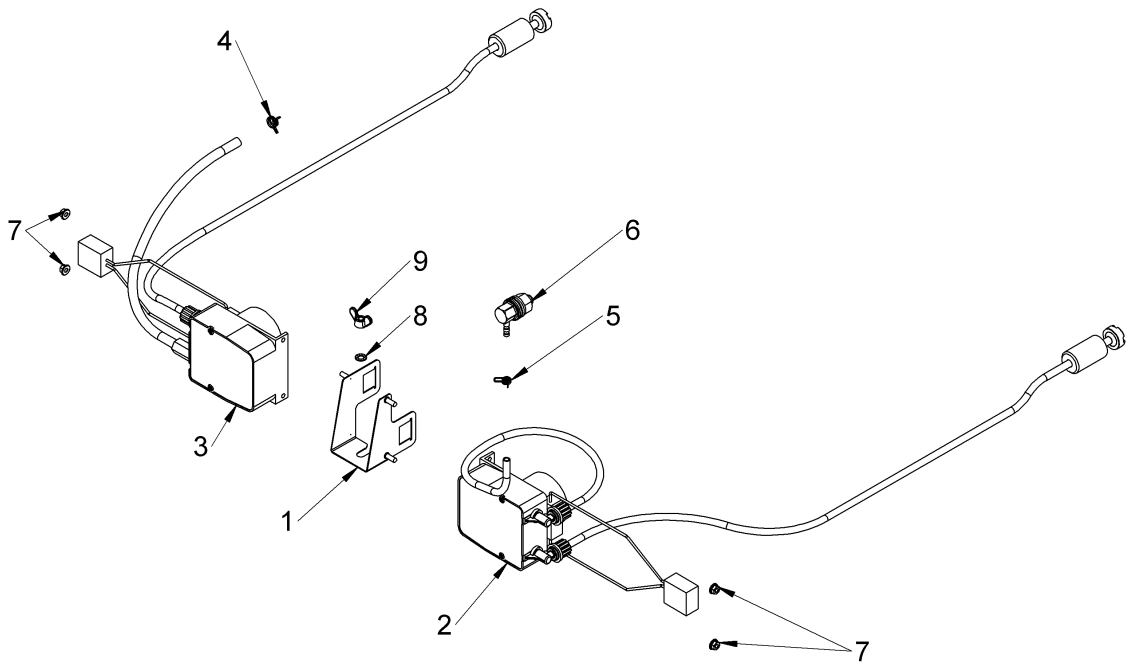

30012343-A

19. Chemical pump assembly – BOM

Item	Description	Part number	QTY.	Note
1	Chemical pump bracket assembly	30011626	1	
2	Detergent Pump Assembly	30011805	1	
3	Rinse aid pump assembly	30011806	1	
4	Spring clip - Ø8.8mm to Ø9.3mm	30011994	1	
5	Spring clip - Ø6.6mm to Ø7mm	30011995	1	
6	Detergent inlet fitting	30011822	1	
7	M4 Flange nut (DIN 6923)	30006237	4	
8	M5 Serrated washer	30001126	1	
9	M5 Wing Nut	30001132	1	

20. Detergent pump assembly (30011805)

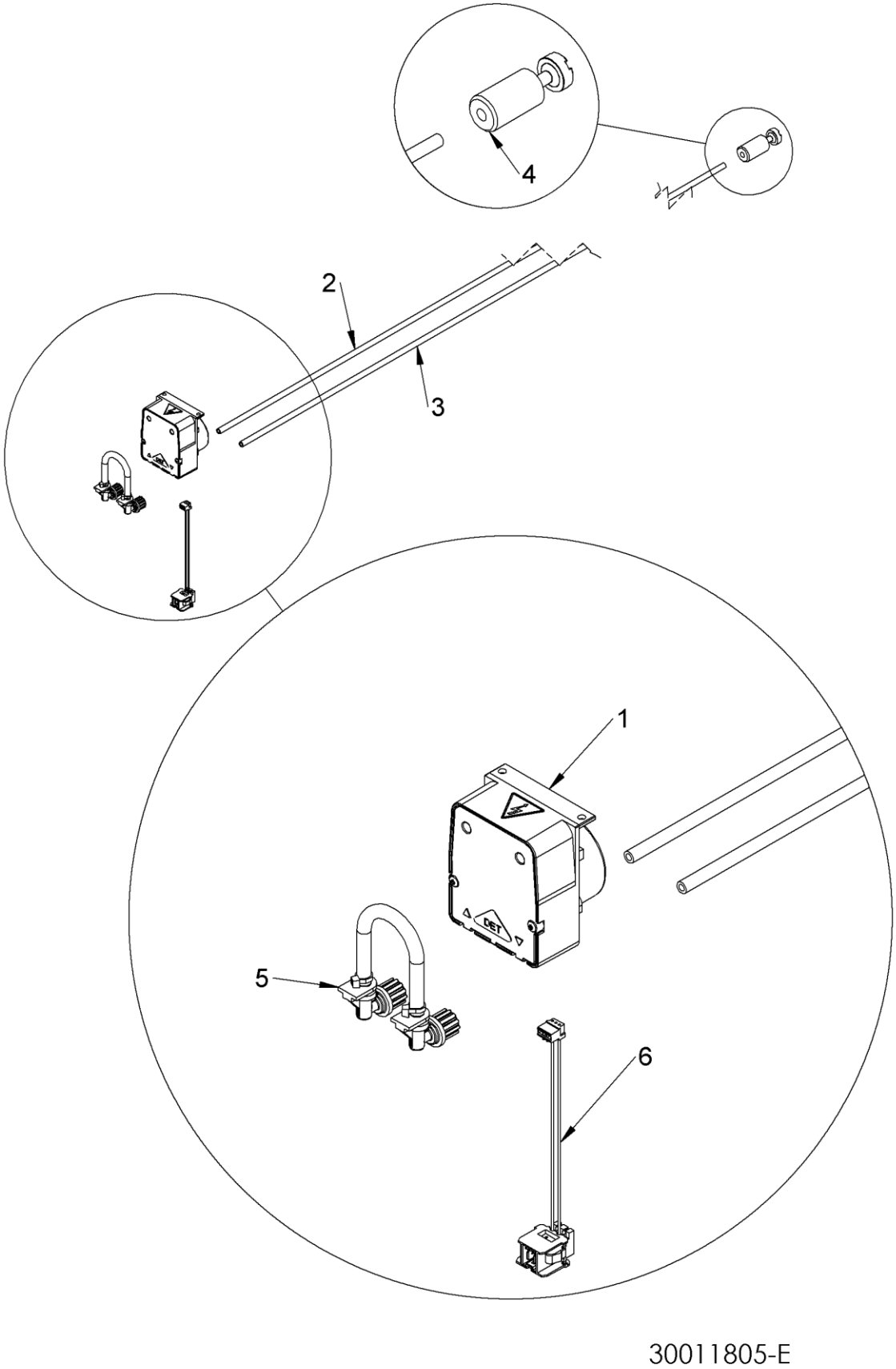

20. Detergent pump assembly – BOM

Item	Description	Part number	QTY.	Note
1	Detergent pump housing		1	Not available as a spare
2	Detergent inlet tube	30012405	1	Clear Tube
3	Detergent outlet tube	30012406	1	
4	Bottle weight kit	30012370	1	
5	Detergent hose	30000996	1	
6	DET Connection Wire		1	Not available as a spare

21. Rinse aid pump assembly (30011806)

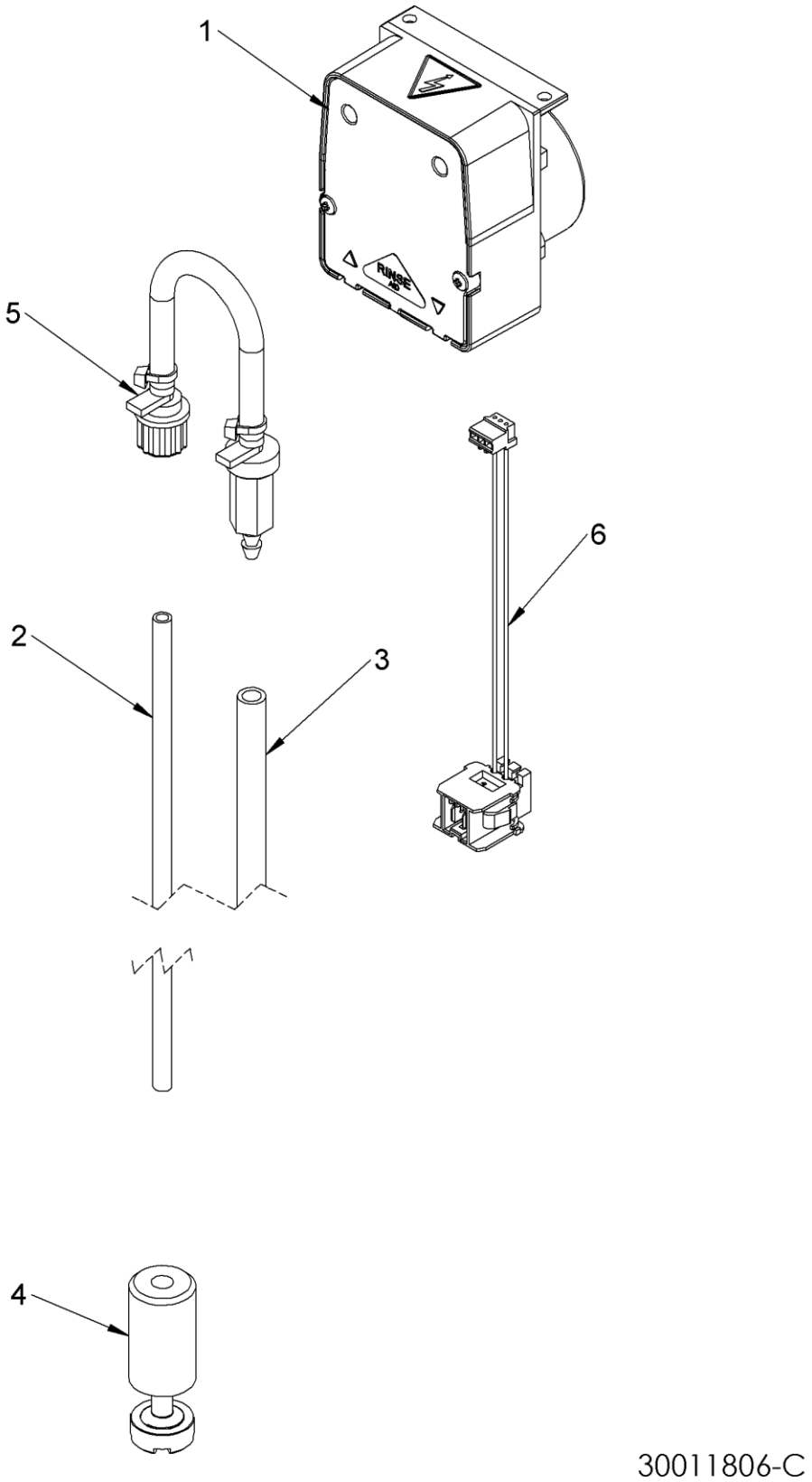

21. Rinse aid pump assembly – BOM

Item	Description	Part number	QTY.	Note
1	Rinse aid pump housing		1	Not available as a spare
2	Rinse aid inlet tube	30012413	1	Blue Tube
3	Rinse aid outlet tube	30012414	1	
4	Bottle weight kit	30012370	1	
5	Rinse aid peristaltic tube assembly	30012415	1	
6	Rinse Aid Connection Wire		1	Not available as a spare

22. Door assembly

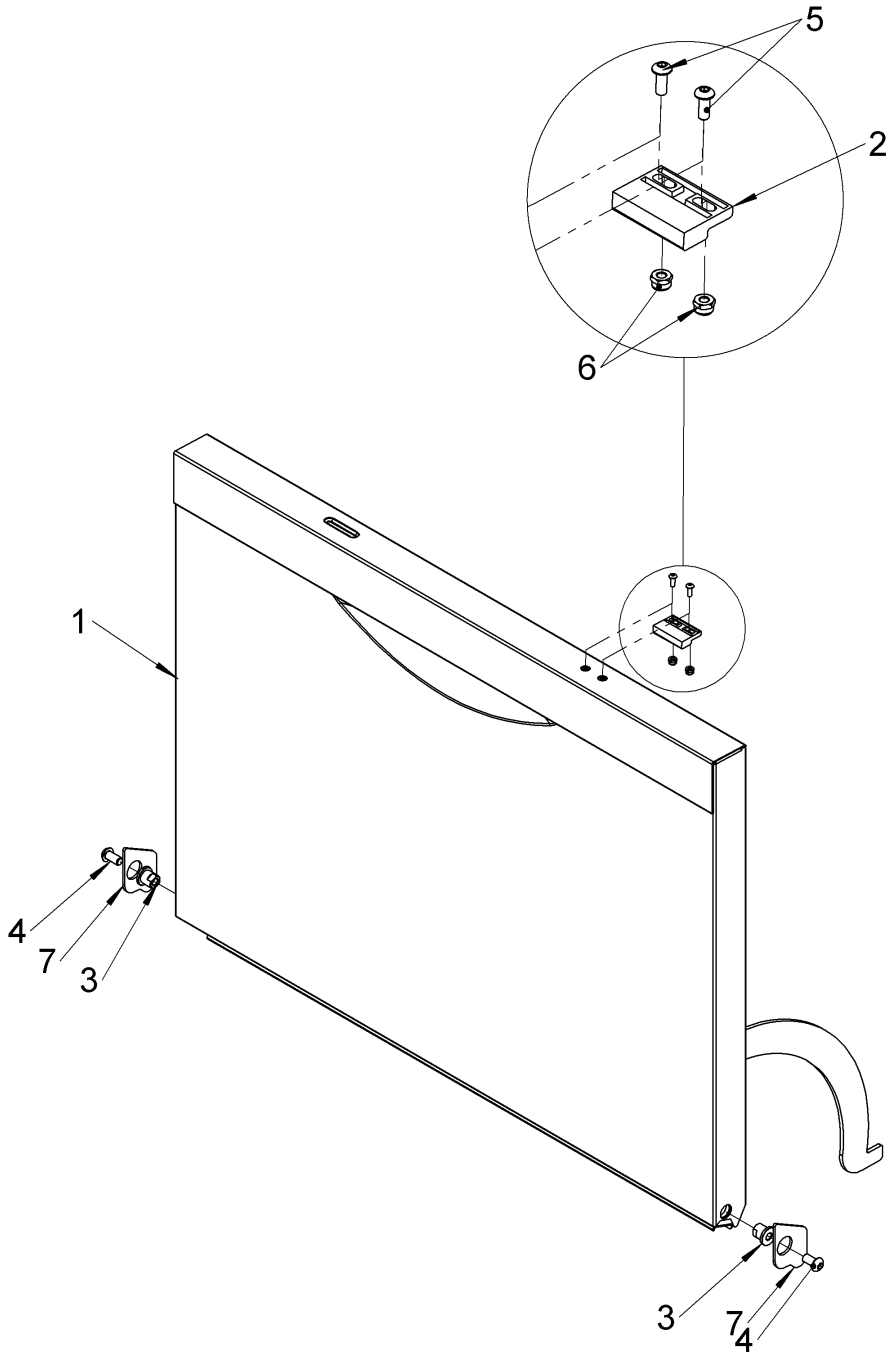

30012338-B

22. Door assembly - BOM

Item	Description	Part number	QTY.	Note
1	Door assembly - 500mm	30011390	1	
2	Door magnet	30000981	1	
3	Door pivot pin	30001050	2	
4	M6 x 12 Hex socket button head screw (Blue Patch)	30001063	2	
5	M3 x 8 Hex socket button head screw	30001059	2	
6	M3 Thin Nylock nut (ISO 10511)	30001051	2	
7	Door corner bracket	30006015	2	

23. 500mm SS LCD Top panel assembly

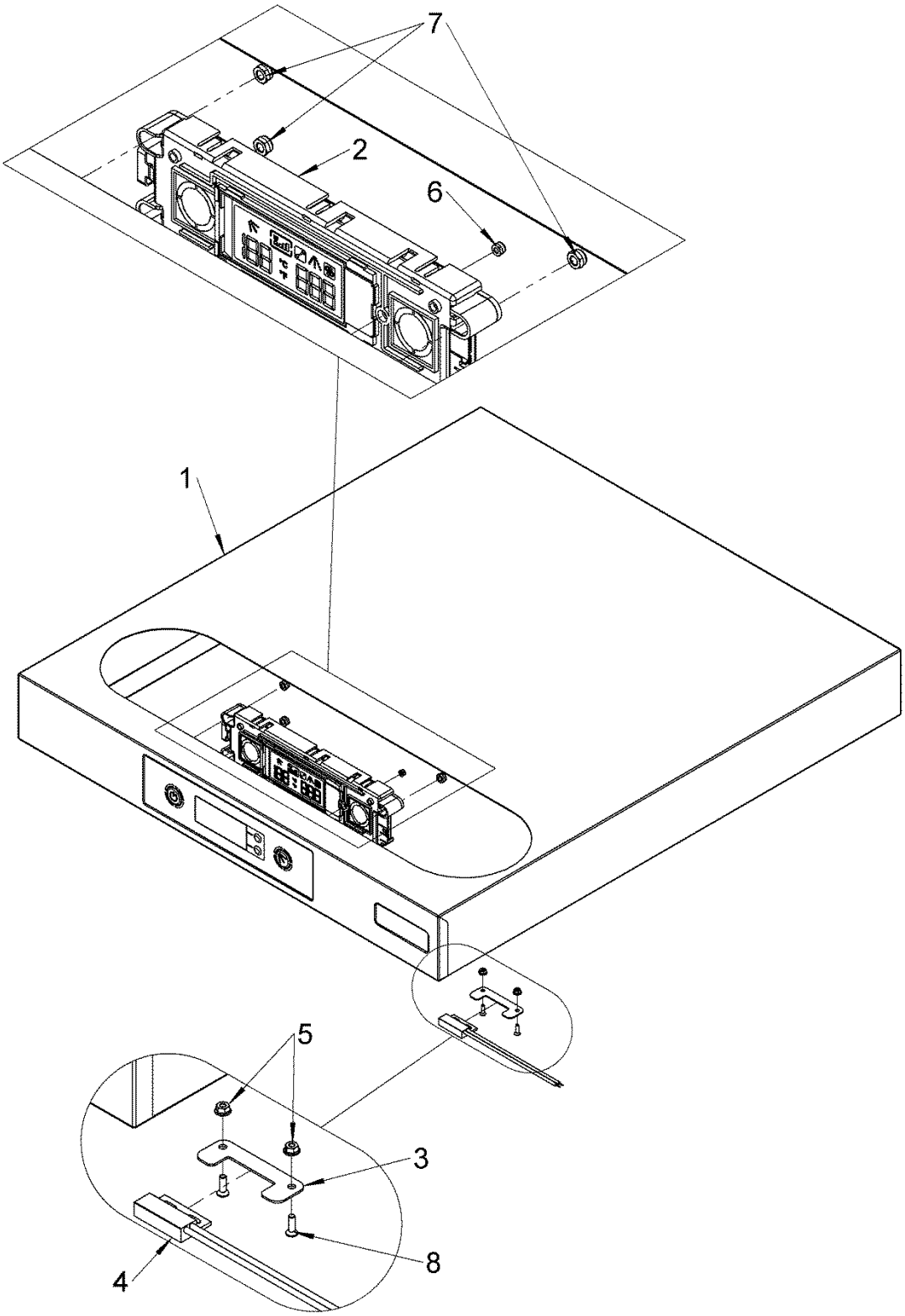

30012359-A

23. 500mm SS LCD Top panel assembly – BOM

Item	Description	Part number	QTY.	Note
1	500mm SS LCD top panel	30012443	1	
2	Premium UI assembly	30011403	1	
3	Door switch bracket	30011690	1	
4	Crimped proximity switch assembly	30000980	1	
5	M3 Flange nut (DIN 6923)	30001171	2	
6	M3 Thin Nylock nut (ISO 10511)	30001051	1	
7	M5 Thin Nylock nut (ISO 10511)	30006274	3	
8	M3 x 10 CSK hex socket head screw	30011975	2	

24. 500mm SS LCD Top Panel

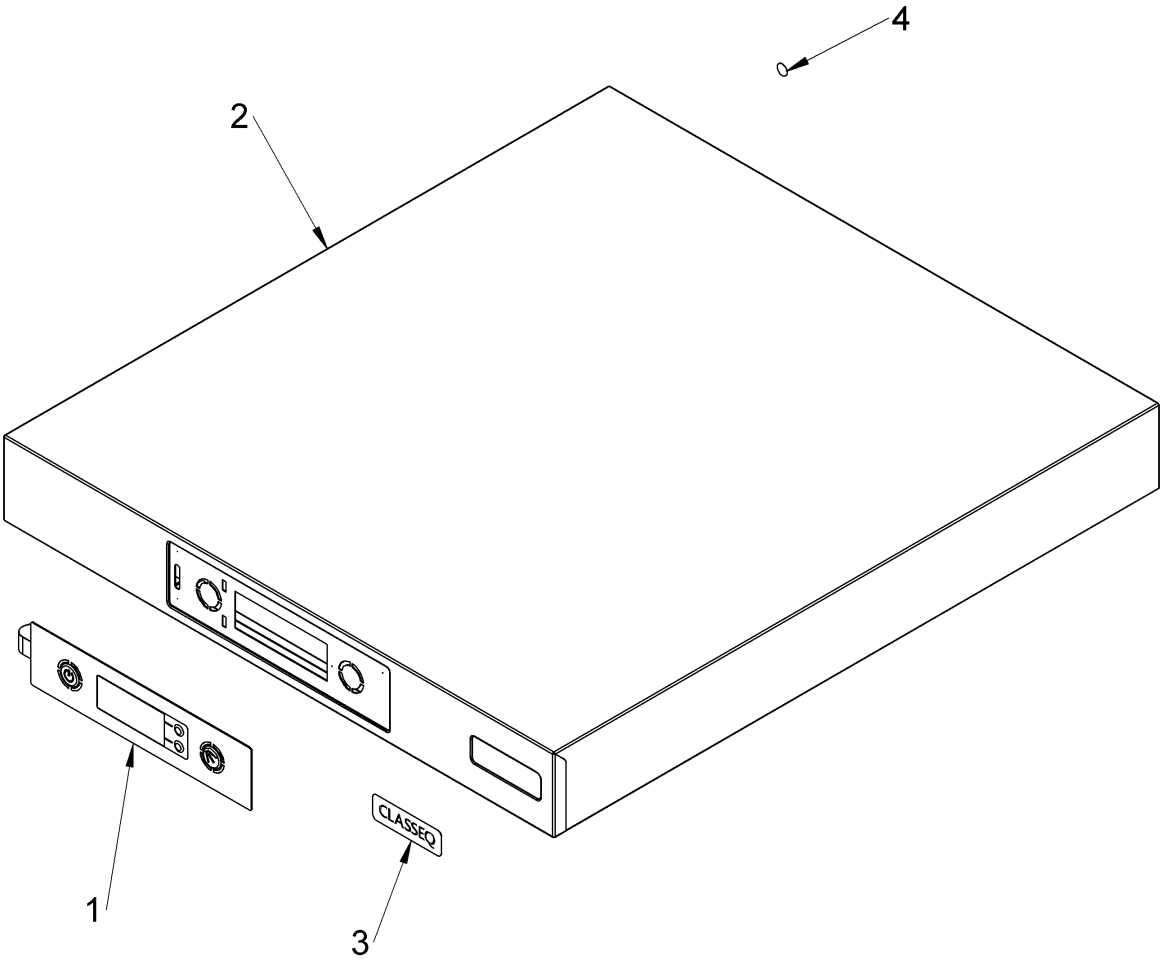

30012443-A

24. 500mm SS LCD Top Panel - BOM

Item	Description	Part number	QTY.	Note
1	LCD Keypad Kit	30012749	1	
2	500mm SS top panel assembly		1	Not available as a spare
3	CLASSEQ badge		1	Not available as a spare
4	Earth sticker	30008786	1	

25. 500mm SS LED Top panel assembly

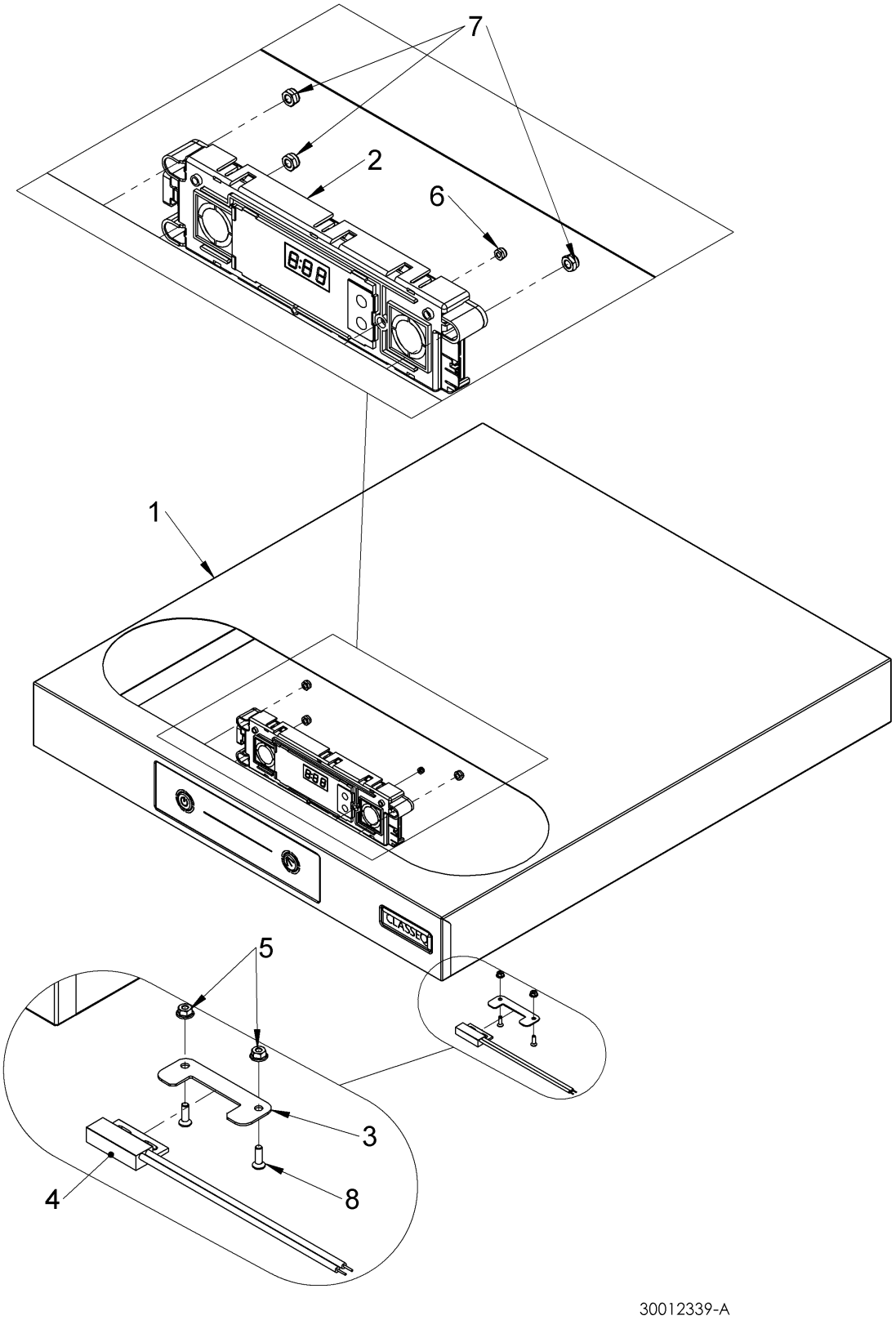

25. 500mm SS LED Top panel assembly – BOM

Item	Description	Part number	QTY.	Note
1	500mm SS LED top panel	30012442	1	
2	LED UI assembly	30011791	1	
3	Door switch bracket	30011690	1	
4	Crimped proximity switch assembly	30000980	1	
5	M3 Flange nut (DIN 6923)	30001171	2	
6	M3 Thin Nylock nut (ISO 10511)	30001051	1	
7	M5 Thin Nylock nut (ISO 10511)	30006274	3	
8	M3 x 10 CSK hex socket head screw	30011975	2	

26. 500mm SS LED Top panel

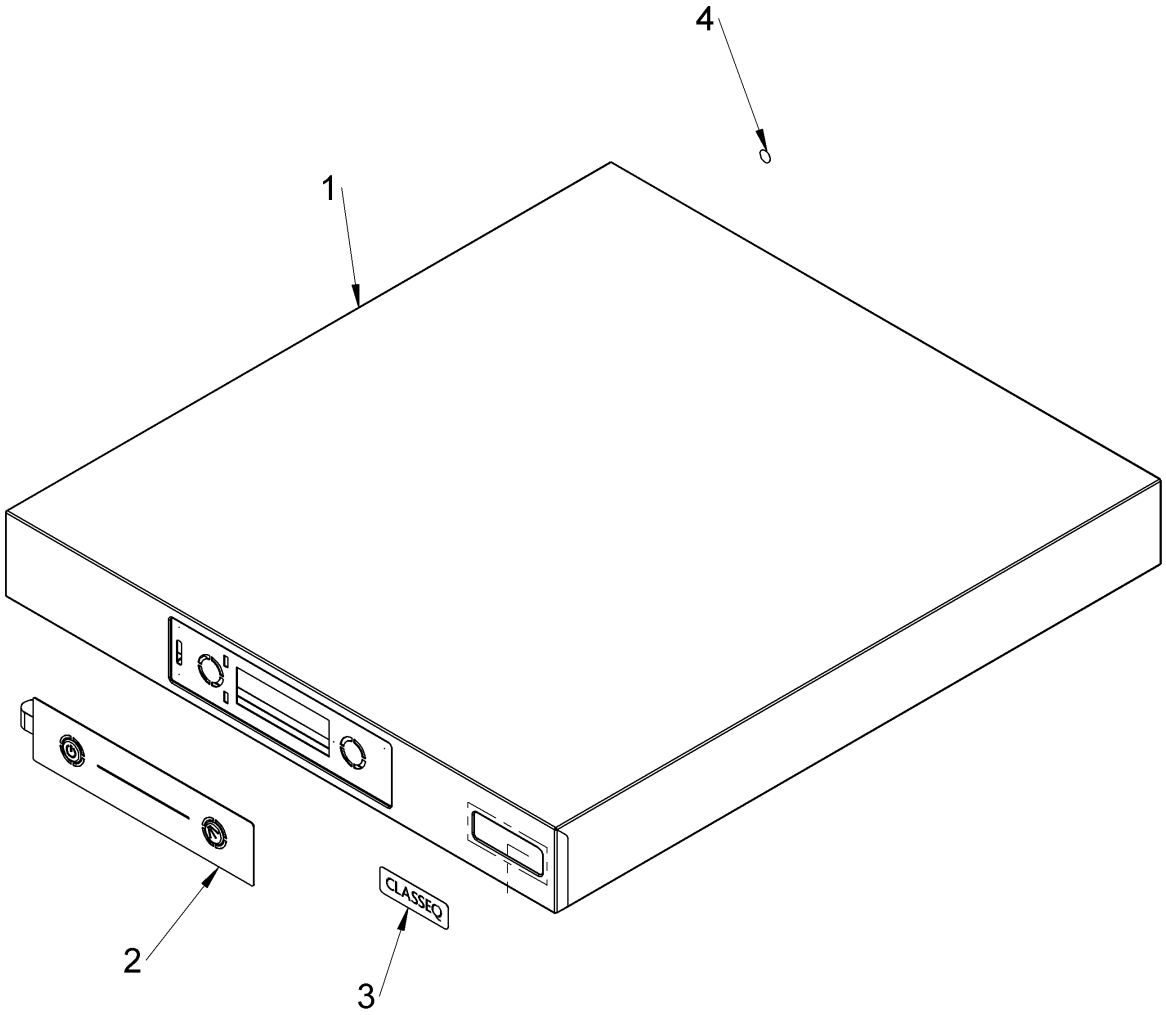

30012442-A

26. 500mm SS LED Top panel – BOM

Item	Description	Part number	QTY.	Note
1	500mm SS top panel assembly		1	Not available as a spare
2	LED Keypad Kit	30012750	1	
3	CLASSEQ badge		1	Not available as a spare
4	Earth sticker	30008786	1	

27. Cable Accessories

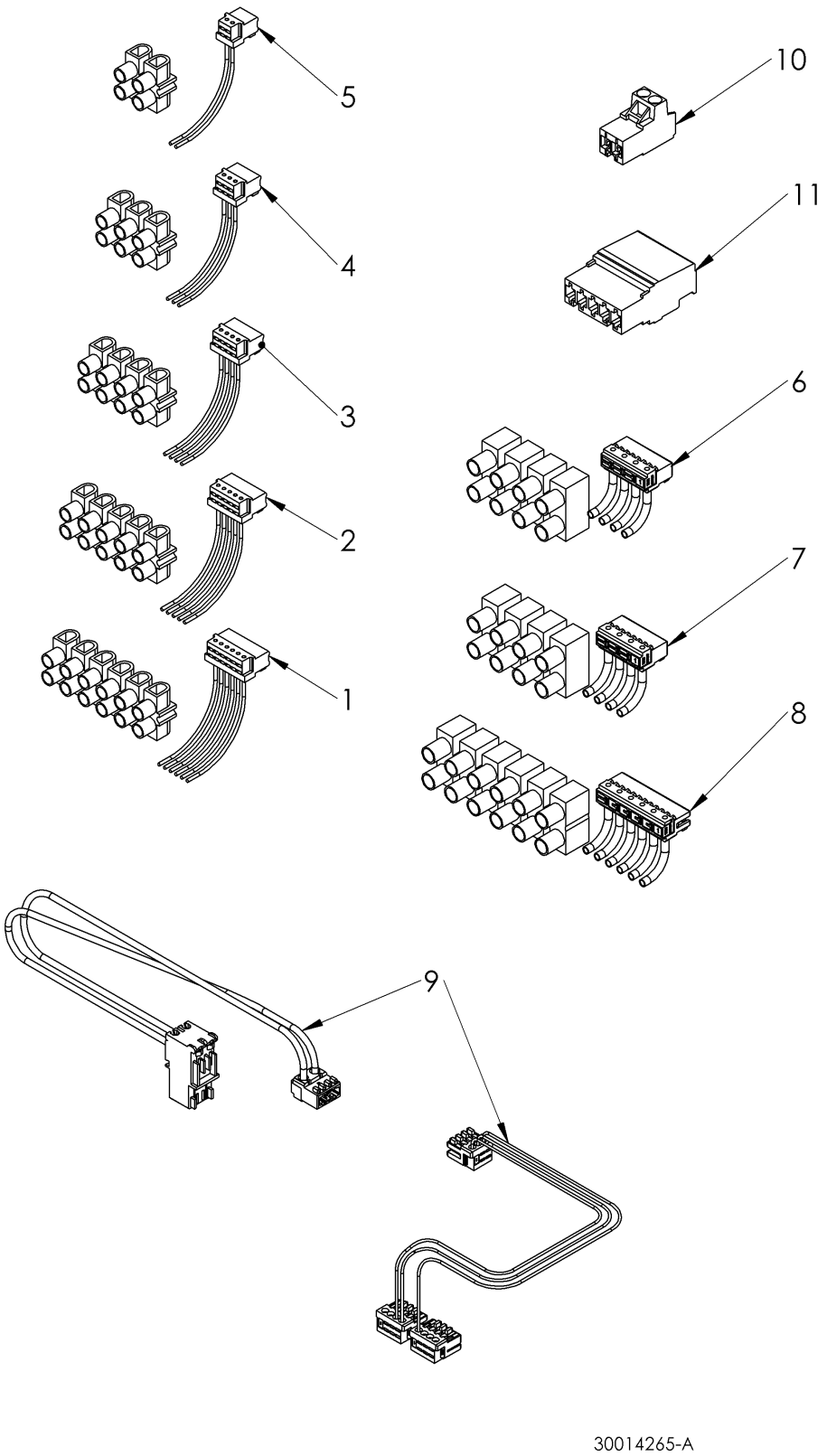

27. Cable Accessories – BOM

Item	Description	Part number	QTY.	Note
1	KIT MACRO-MODULE PLUG SIZE 2,5 6-POLE	30002484	1	
2	KIT MACRO-MODULE PLUG SIZE 2,5 5-POLE	30002483	1	
3	KIT MACRO-MODULE PLUG SIZE 2,5 4-POLE	30002482	1	
4	KIT MACRO-MODULE PLUG SIZE 2,5 3-POLE	30000198	1	
5	KIT MACRO-MODULE PLUG SIZE 2,5 2-POLE	30000197	1	
6	Module Plug (Size 5,0 / 4Pole) Type A	30014137	1	
7	Module Plug (Size 5,0 / 4Pole) Type B	30014138	1	
8	Module Plug (Size 5,0 / 6Pole)	30014140	1	
9	ZSE Water Softener Harness Kit	30014124	1	
10	MACRO-MODULE PLUG5, 5-POLE	3112091	1	
11	Marco Module Plug5, 5Pole	30002002	1	
12	6.0kW Element Wire Kit	30013685	1	Not shown
13	2.6kW Element Wire Kit	30013686	1	Not shown

28. Accessories

Item	Description	Part number	QTY.	Note
1	Water supply hose	30001162	1	
2	500mm² open basket	30001197	1	
3	500mm² dish basket	30001198	1	
4	Large cutlery basket	3602258	1	

29. Mains cables

Item	Description	Part number	QTY.	Note
1	13A mains cable kit	30003306	1	
2	3 phase mains cable kit	30003308	1	
3	30A mains cable kit	30012385	1	
4	20A mains cable kit	30003307	1	
5	15A AU Mains cable kit	30012774	1	
6	16A European Mains cable kit	30012775	1	
7	13A No Plug Mains cable kit	30012776	1	
8	15A No Plug Mains cable kit	30012777	1	
9	Mains cable 4G2.5 - No neutral	30008652	1	

Document number: 30013144
Revision: E
Date: 25/03/2019
Language: English