ECO 2

HYDRO 400

DUO 2

DUO 400

Contents	Page Number
Filters & Basket Supports	4-5
Single Skin Wash Cabinet Assembly - External	6-7
Double Skin Wash Cabinet Assembly - External	8-9
Door Assembly	10-11
Wash Cabinet - Internal	12-13
Air Pressure Vessel	14-15
Adjustable Thermostats	16-17
Air Break – Type B	18-19
Air Break – WRAS Approved	20-21
Wash & Rinse System – Glass Washer	22-23
Wash & Rinse System – Dish Washer	24-25
Centre Boss Assembly - Top	26-27
Centre Boss	28-29
Rinse Arm	30-31
Base - Non Air Break Machine	32-33
Base - Air Break Machine	34-35
Rinse Tank	36-37
Wash Pump	38-39
Rinse Pump	40-41
Drain Pump	42-43
Gravity Drain	44-45
Chemical Pumps	46-47
Control Panel	48-49
Panels	50-51
Accessories	53

Filters & Basket Supports

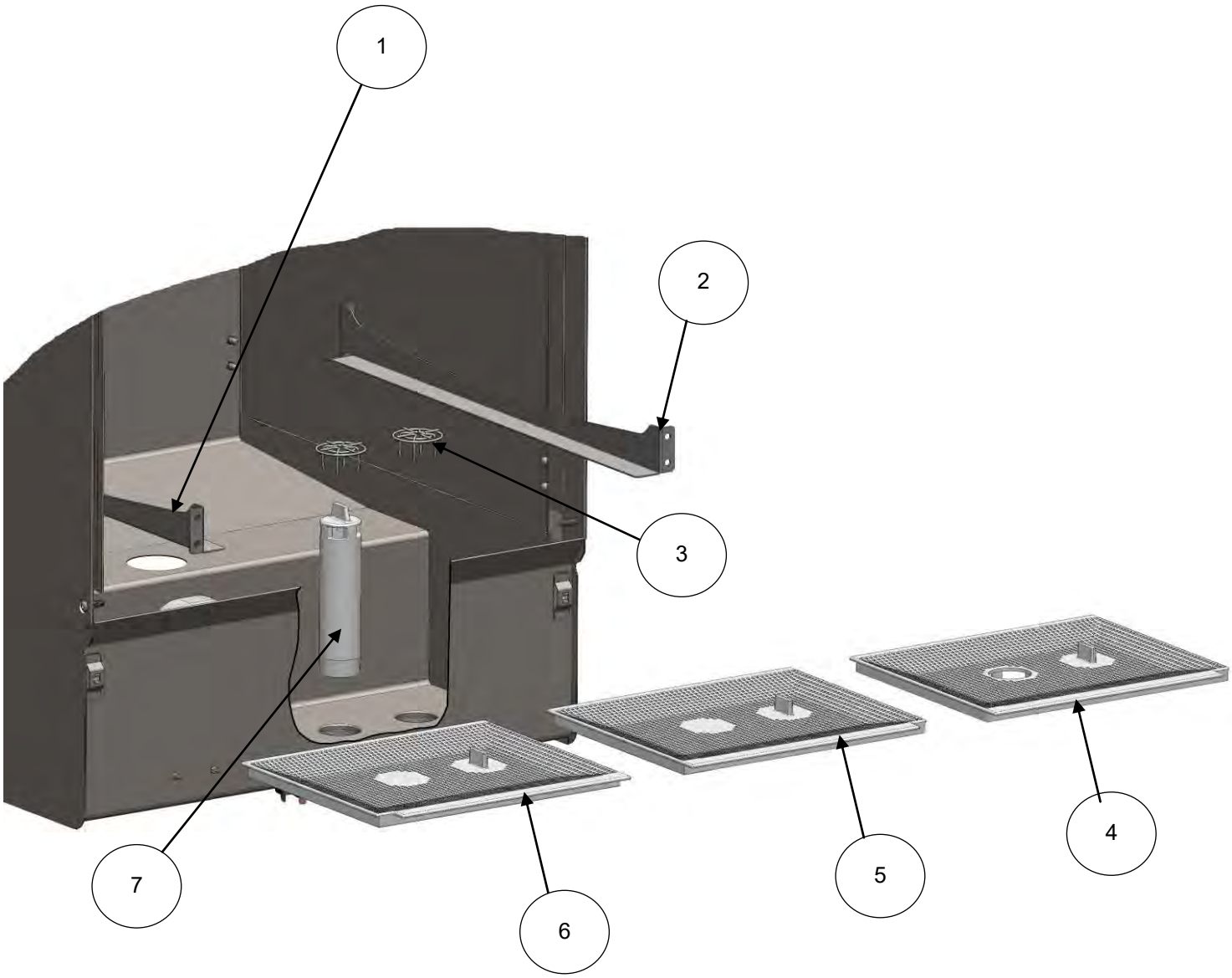

Filters & Basket Supports

Item	Description	Part Number	Qty	Note
1	Basket ramp – 400mm LH	115.0002	1	
2	Basket ramp – 400mm RH	115.0001	1	
3	Secondary filter – metal	180.0002	2	Only 1 required on gravity drain machine
4	Wash filter right 400mm gravity	230.0001	1	Only required on gravity drain machine
5	Wash filter right 400mm pumped	230.0002	1	Only required on drain pump machine
6	Wash filter left 400mm	230.0003	1	
7	Drain plug	232.0001	1	Only required on gravity drain machine

Single Skin Wash Cabinet Assembly – External

ECO 2 HYDRO 400

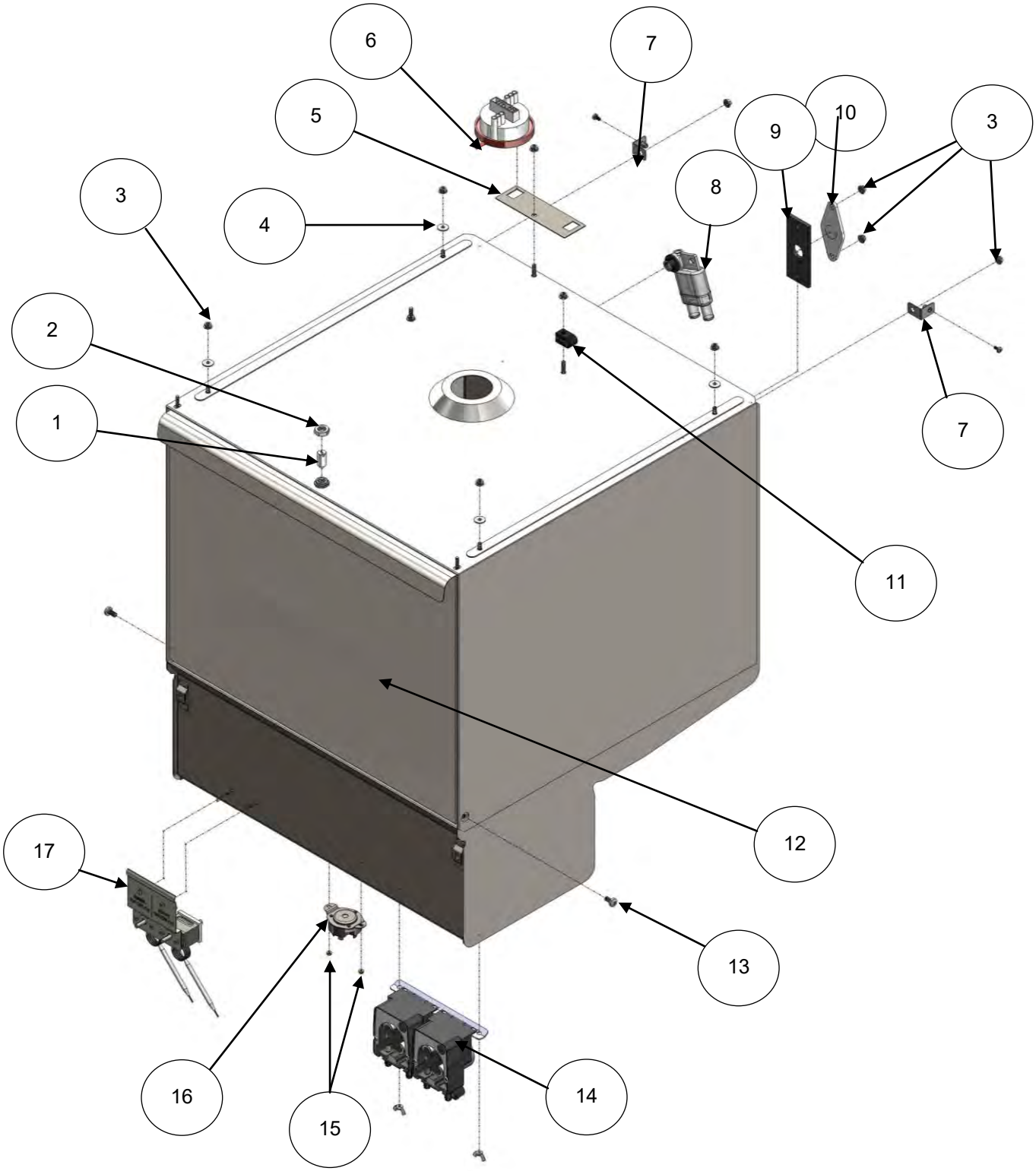

Single Skin Wash Cabinet Assembly – External

ECO 2 HYDRO 400

Item	Description	Part Number	Qty.	Note
1	Ball catch (M12)	320.0001	1	
2	Thin nut M12	TNUT-12	1	
3	M5 nut – Flanged SS	FNUT-05	11	
4	Flanged bushed 6.2x8.9x15x1.5	330.0001	4	
5	Bracket air pressure switch	102.0003	1	
6	Air pressure switch double	530.0001	1	
7	Bracket – Rear panel	163.0001	2	
8	Type B air break	-	1	See page 18 – 19
9	Seal – Air break	301.0002	1	
10	20mm blanking cover	255.0001	1	
11	Cable cleat #03	331.0001	1	13A machines
12	Door assembly 400mm	-	1	See page 10 – 11
13	M6 x 12mm Socket button head screw	SC100	2	
14	Chemical pumps	-	1	See page 46 – 47
15	M3 nut – Flanged SS	FNUT-03	4	
16	Manual reset thermal trip switch – 3 Pole – 85˚C	540.0003	1	
17	Adjustable Thermostats	-	1	See page 16 – 17
18	PVC Hose	RT2/1	1	Length – 0.93m; Not shown

Double Skin Wash Cabinet Assembly – External

DUO 2 DUO 400

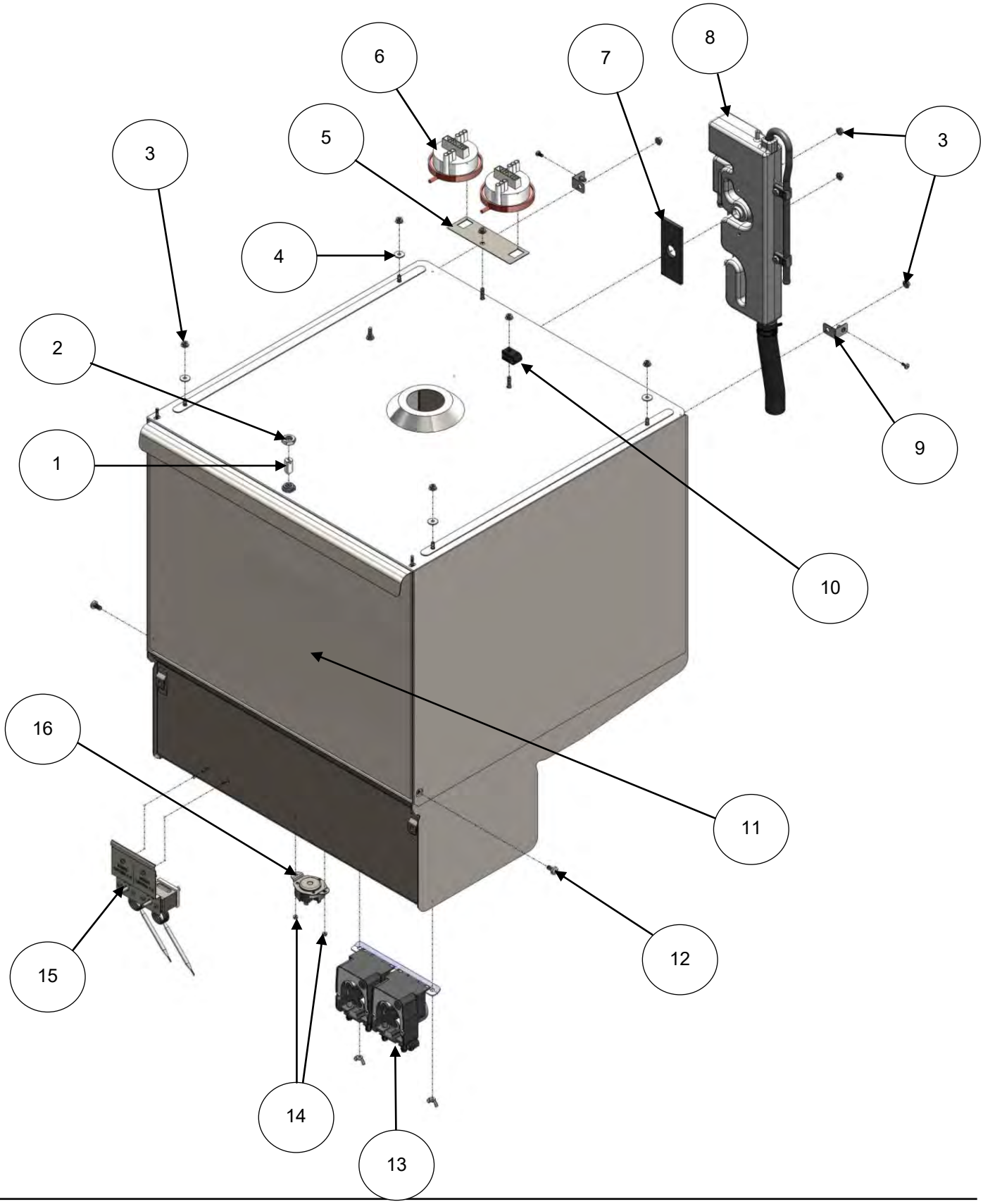

Double Skin Wash Cabinet Assembly – External

DUO 2 DUO 400

Item	Description	Part Number	Qty.	Note
1	Ball catch (M12)	320.0001	1	
2	Thin nut M12	TNUT-12	1	
3	M5 nut – Flanged SS	FNUT-05	11	
4	Flanged bushed 6.2x8.9x15x1.5	330.0001	4	
5	Bracket air pressure switch	102.0003	1	
6	Air pressure switch double	530.0001	2	
7	Seal – Air break	301.0002	1	
8	Air break (WRAS approved)	-	1	See page 20 – 21
9	Bracket – Rear panel	163.0001	2	
10	Cable cleat #03	331.0001	1	13A machines
11	Door assembly 400mm	-	1	See page 10 – 11
12	M6 x 12mm Socket button head screw	SC100	2	
13	Chemical pumps	-	1	See page 46 – 47
14	M3 nut – Flanged SS	FNUT-03	4	
15	Adjustable Thermostats	-	1	See page 16 – 17
16	Manual reset thermal trip switch – 3 Pole – 85˚C	540.0003	1	
17	PVC Hose	RT2/1	1	Length – 0.93m; not shown
18	Silicon Hose	RT3/1	1	Length – 0.88m; not shown

Door Assembly

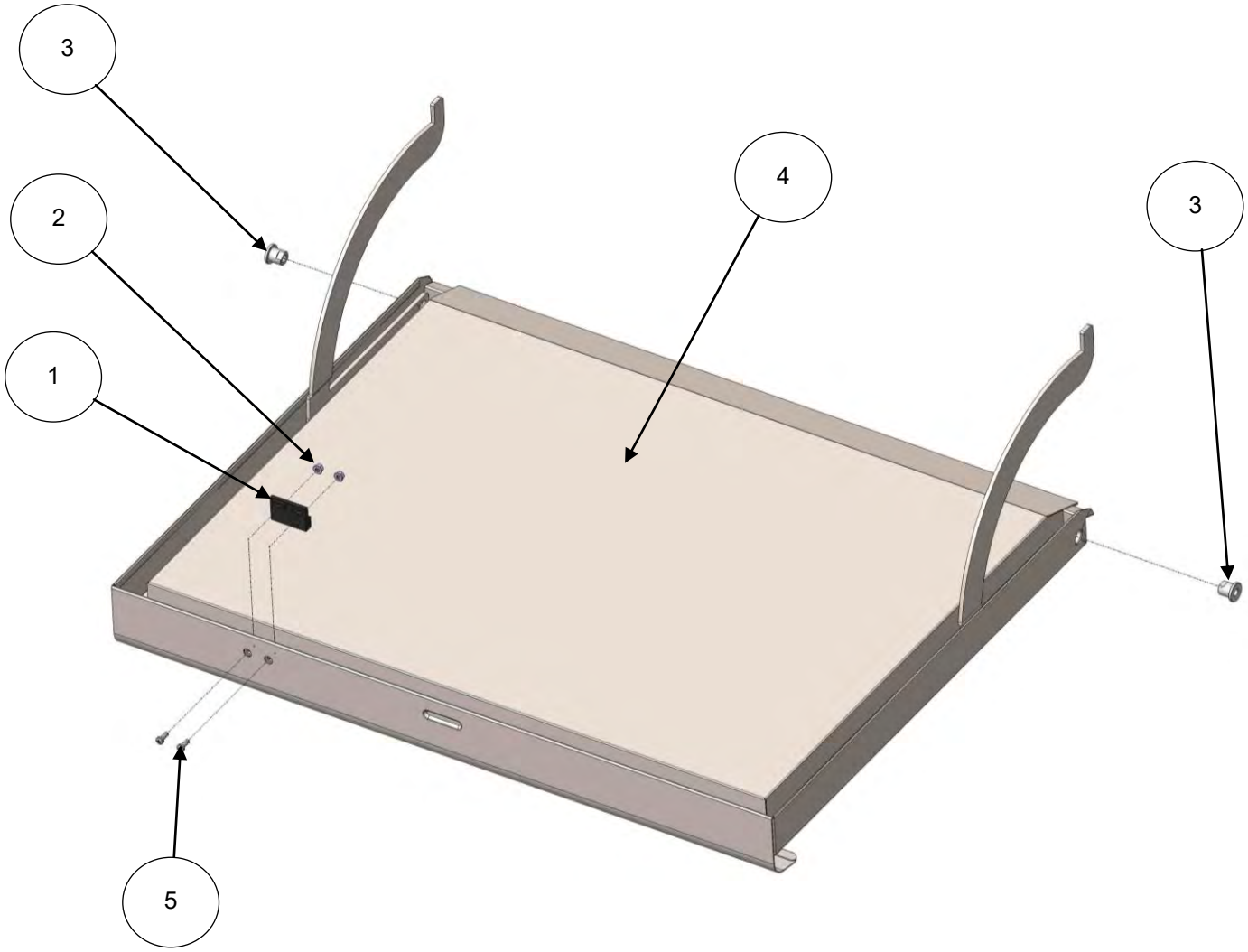

Door Assembly

Item	Description	Part Number	Qty	Note
1	Magnet door switch	571.0001	1	
2	Nyloc Nut M3 SS	NNUT-03	2	
3	Door pivot pin	100.0002	2	
4	400mm door	111.0001	1	
5	M3 x 8mm Socket button screw	SC101	2	

Wash Cabinet – Internal

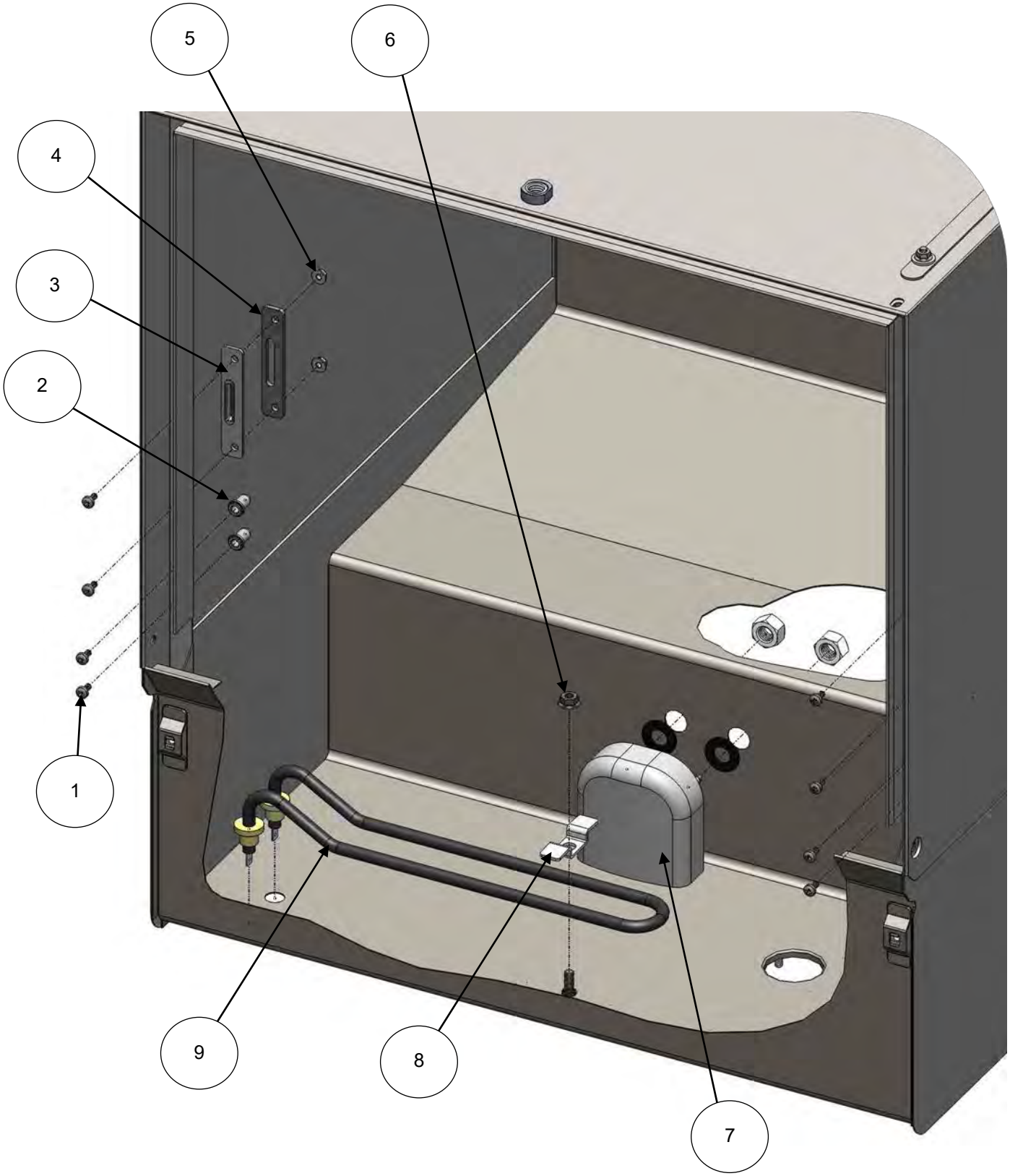

Wash Cabinet – Internal

Item	Description	Part Number	Qty	Note
1	Screw pan head pozi M4 x 10 SS	SC111	8	
2	Basket ramp support nutsert M4	100.0009	4	
3	Door Inlay	256.0001	2	
4	Plate – Door stop	102.0002	2	
5	Nyloc nut M4 SS	NNUT-04	4	
6	Flange nut M6 SS	FNUT-06	1	
7	Air pressure vessel assembly	-	1	See page 14 – 15
8	Element retaining bracket	7.6.6/22	1	
9	Wash element ; 2kW	555.0001	1	Includes 2 x Washers and 2 x M12 fine thread thin nut

Air Pressure Vessel

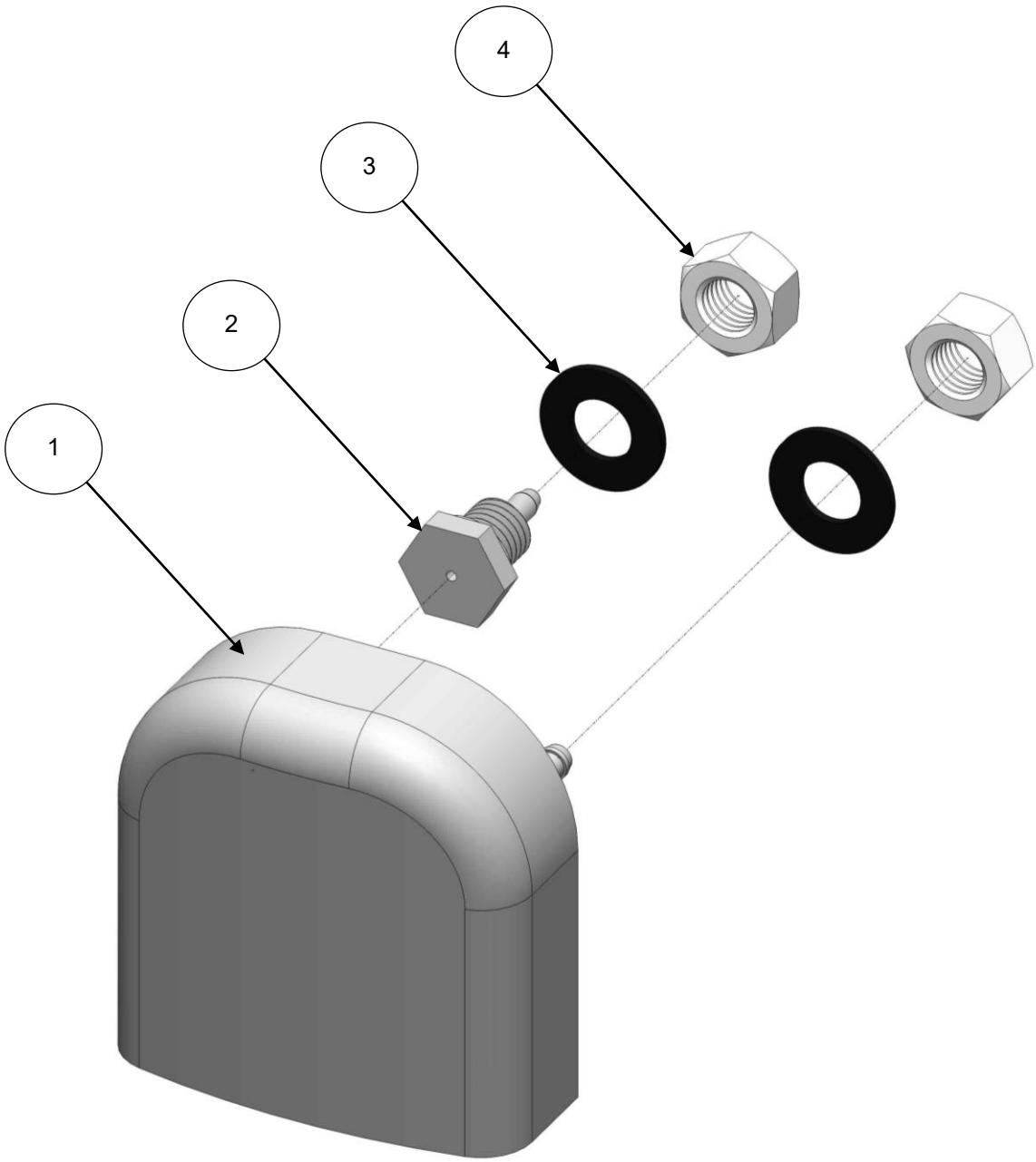

Air Pressure Vessel

Item	Description	Part Number	Qty	Note
1	Air pressure vessel	260.0001	1	
2	Detergent inlet fitting	100.0018	1	
3	EPDM rubber seal	300.1224	2	
4	Plastic Nut M12	PNUT-12	2	

Description	Part Number	Note
Air Pressure Vessel kit	260.0001-SK	

Adjustable Thermostats

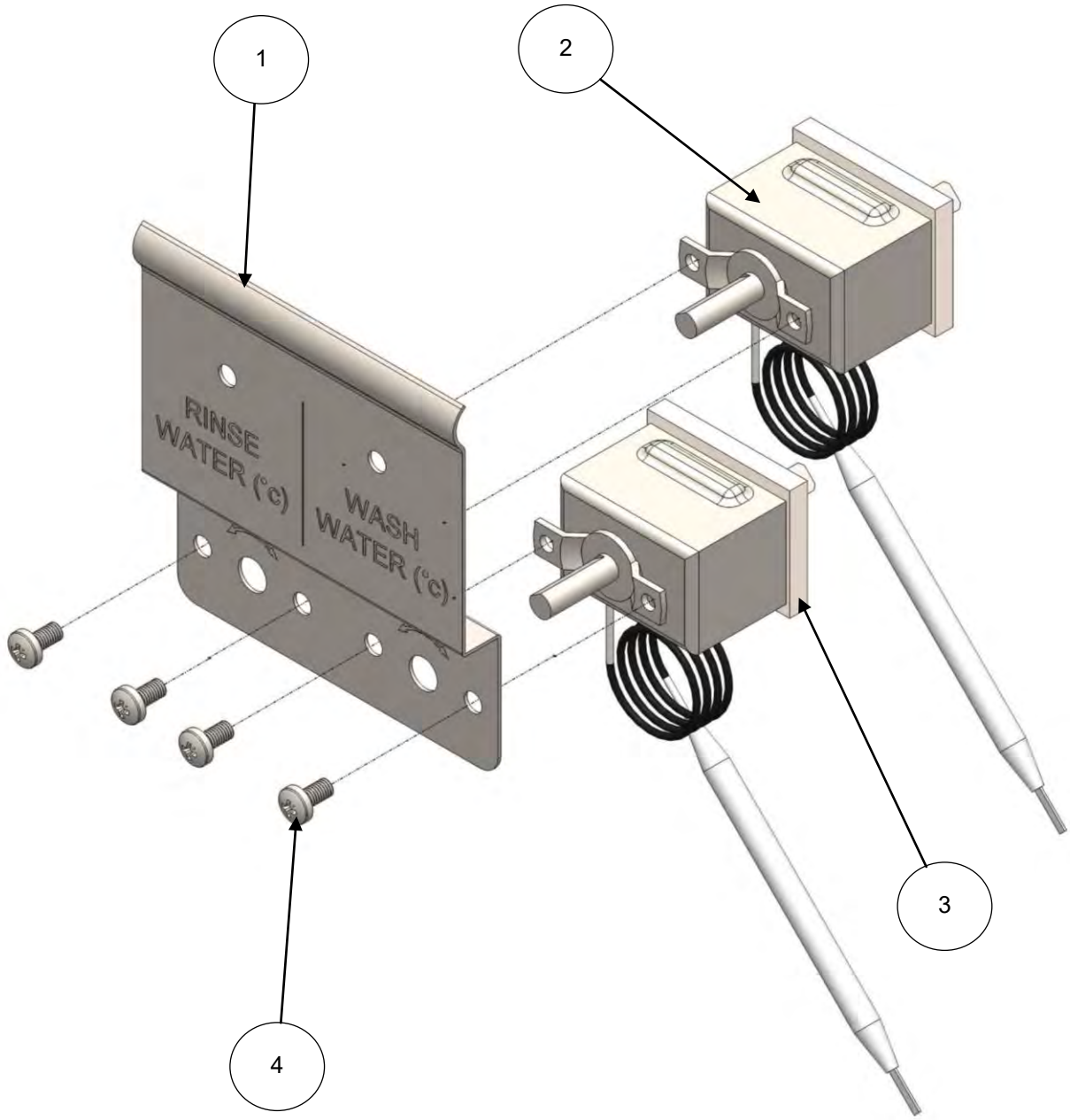

Adjustable Thermostats

Item	Description	Part Number	Qty	Note
1	Thermostat Bracket	164.0009	1	
2	Adjustable Thermostat	542.0002	1	For Rinse
3	Adjustable Thermostat	542.0002	1	For Wash
4	M4 x 6 Pozi head screws	SC040	4	

Air Break – Type B

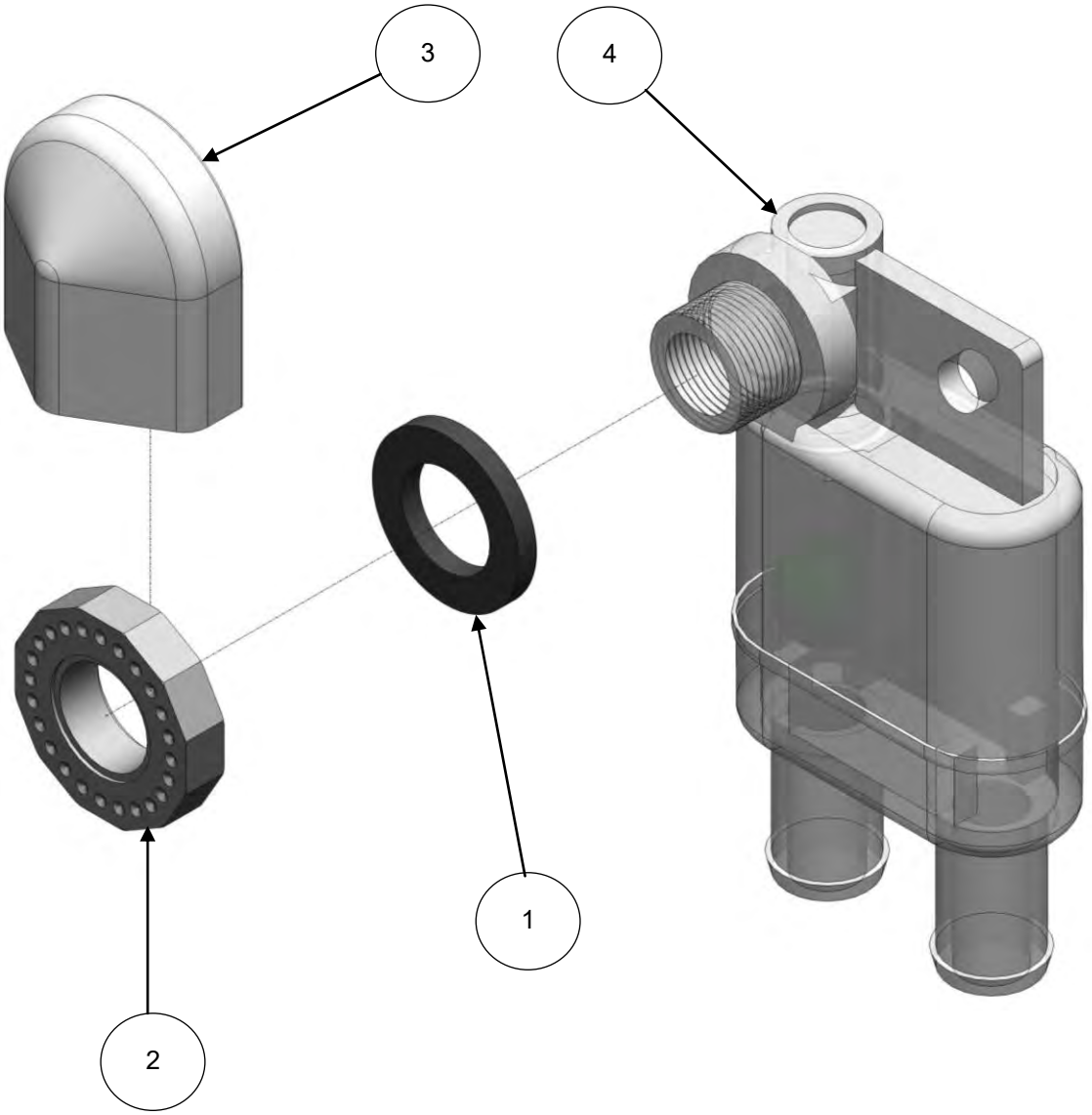

Air Break – Type B

Item	Description	Part Number	Qty	Note
1	Type B air break seal	7.11.3	1	
2	Type B air break nut	61004451	1	
3	Type B air break cover	61004430	1	
4	Type B air break	3501193	1	

Air Break – WRAS Approved

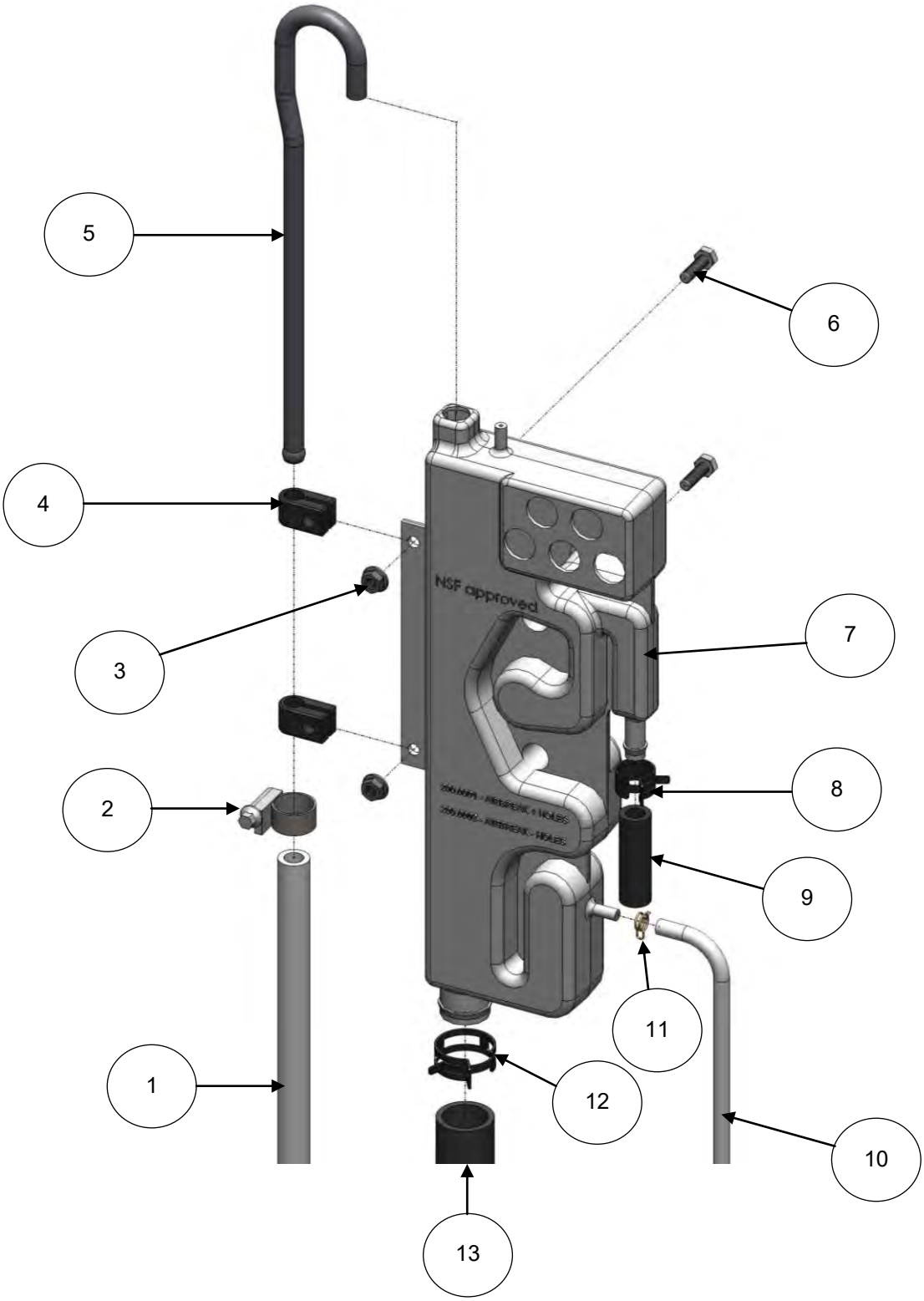

Air Break WRAS Approved

Item	Description	Part Number	Qty	Note
1	Inlet solenoid to air break hose	H-09/1	1	Length – 0.54m
2	Jubilee clip – Ø12mm to Ø22mm	JCLIP-012-022	1	
3	M6 flange nut	FNUT-06	2	
4	Cable cleat #4	331.0002	2	
5	Air break feeder tube	190.0001	1	
6	M6 x 20mm long Hex head screw	SC029	2	
7	Air break (WRAS approved)	200.0001	1	
8	Hose clip Ø18mm	350.0001	1	
9	Air break to rinse boiler breather hose 500mm	402.0013	1	
10	Air break to air pressure switch tube	RT3/1	1	Length – 0.88m
11	Spring clip	7.4.12/7	1	
12	Hose clip Ø26mm	350.0002	1	
13	Air break to rinse boiler fill hose 500mm	402.0005	1	

Wash & Rinse System – Glass washer

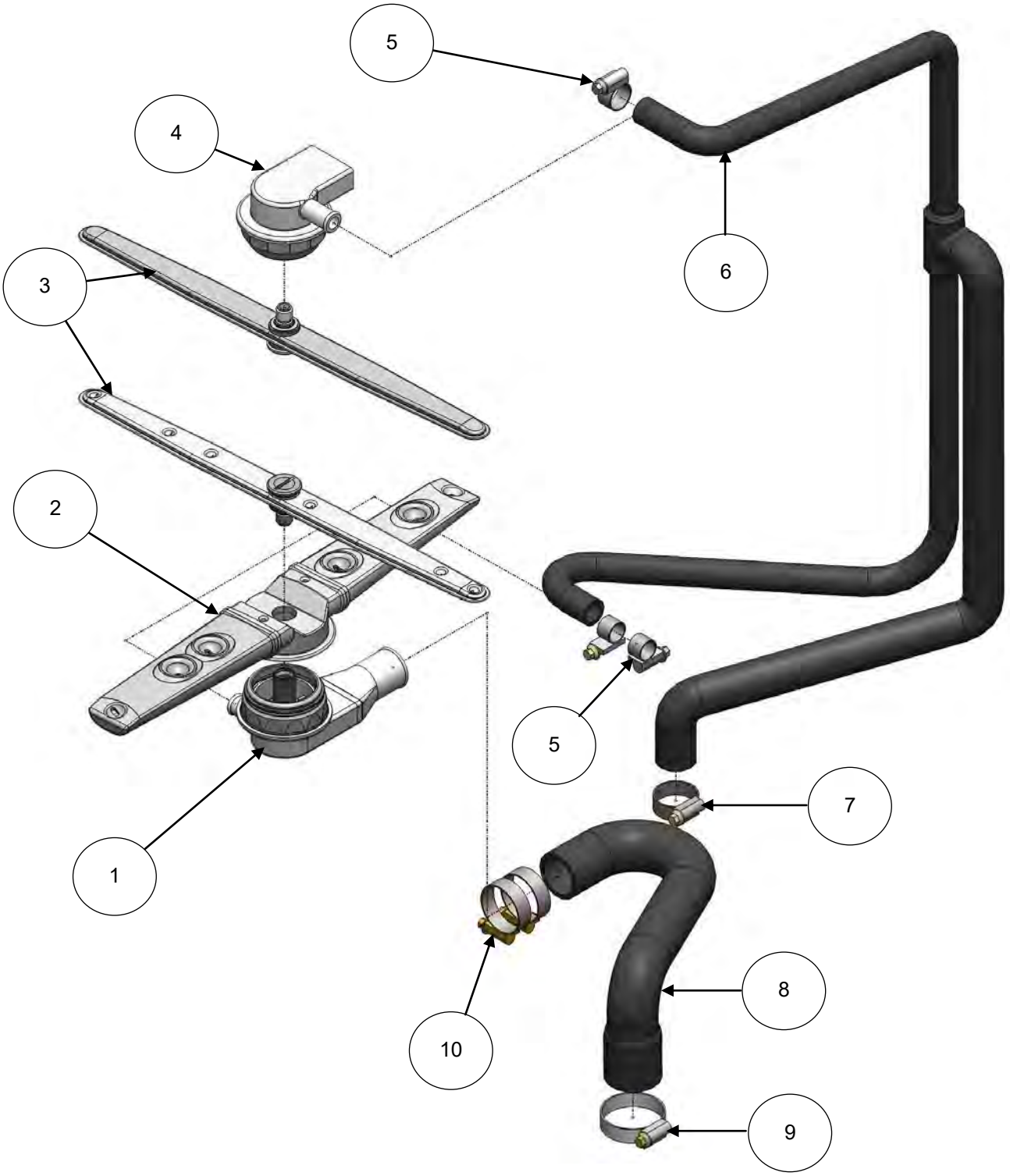

Wash & Rinse System- Glass washer

Item	Description	Part Number	Qty	Note
1	Centre boss assembly	-	1	See page 28 – 29
2	Wash arm – 400mm	62003531	1	
3	Rinse arm assembly – 400mm	-	2	See page 30 – 31
4	Centre boss assembly – Top	-	1	See page 26 – 27
5	Jubilee clip – Ø12mm to Ø22mm	JCLIP-012-022	3	
6	Hose – Rinse system – 400mm	404.0001	1	
7	Jubilee clip – Ø20mm to Ø32mm	JCLIP-020-032	1	
8	Hose – Wash pump outlet 400mm Glass	406.0002	1	
9	Jubilee clip – Ø30mm to Ø45mm	JCLIP-030-045	1	
10	Jubilee clip – Ø25mm to Ø40mm	JCLIP-025-040	2	

Wash & Rinse System- Dish washer

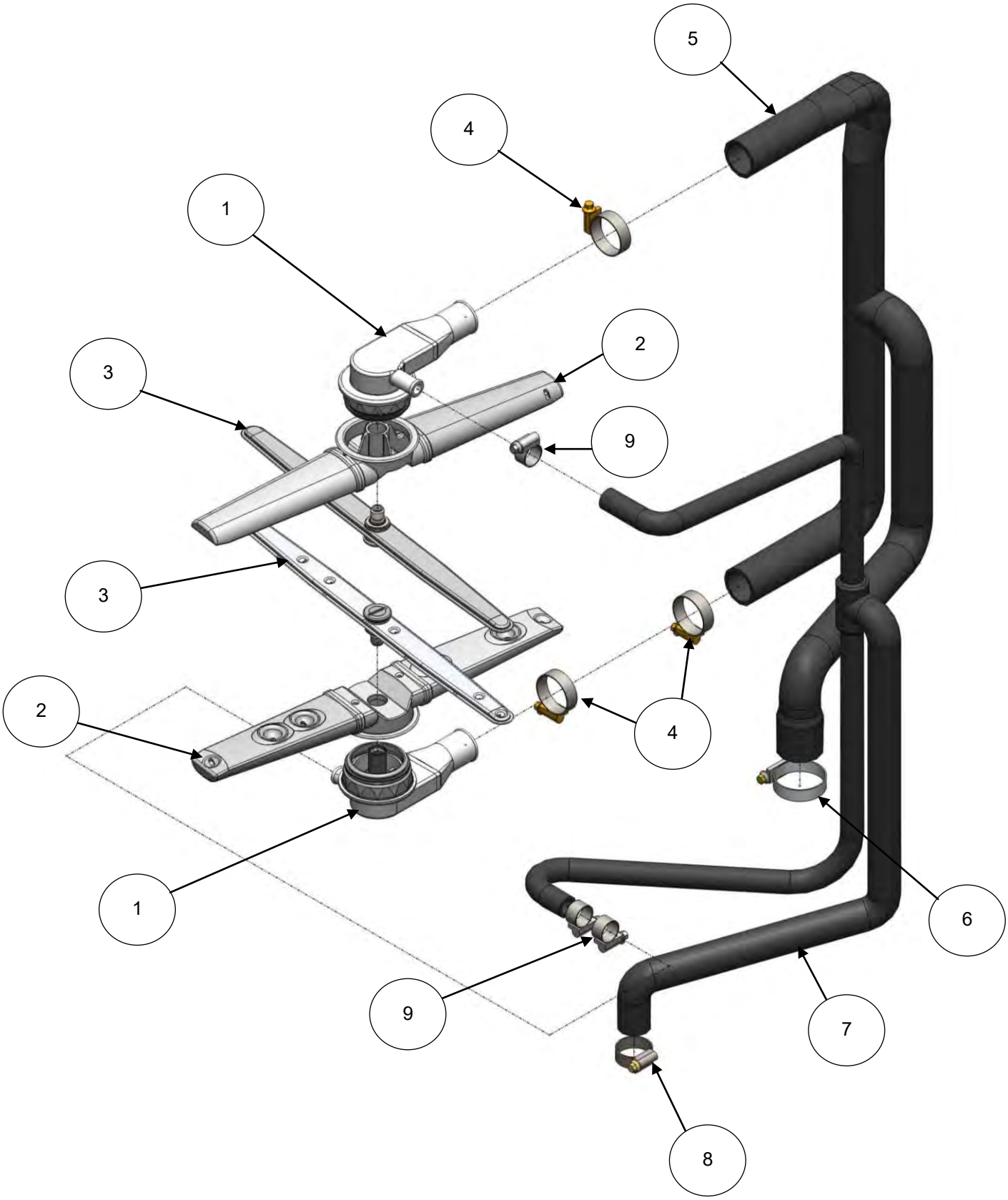

Wash & Rinse System- Dish washer

Item	Description	Part Number	Qty	Note
1	Centre boss assembly	-	2	See page 28 – 29
2	Wash arm – 400mm	62003531	2	
3	Rinse arm assembly – 400mm	-	2	See page 30 – 31
4	Jubilee clip – Ø25mm to Ø40mm	JCLIP-025-040	3	
5	Hose – Wash pump outlet 400mm Dish	406.0001	1	
6	Jubilee clip – Ø30mm to Ø45mm	JCLIP-030-045	1	
7	Hose – Rinse system – 400mm	404.0001	1	
8	Jubilee clip – Ø20mm to Ø32mm	JCLIP-020-032	1	
9	Jubilee clip – Ø12mm to Ø22mm	JCLIP-012-022	3	

Centre Boss Assembly – Top

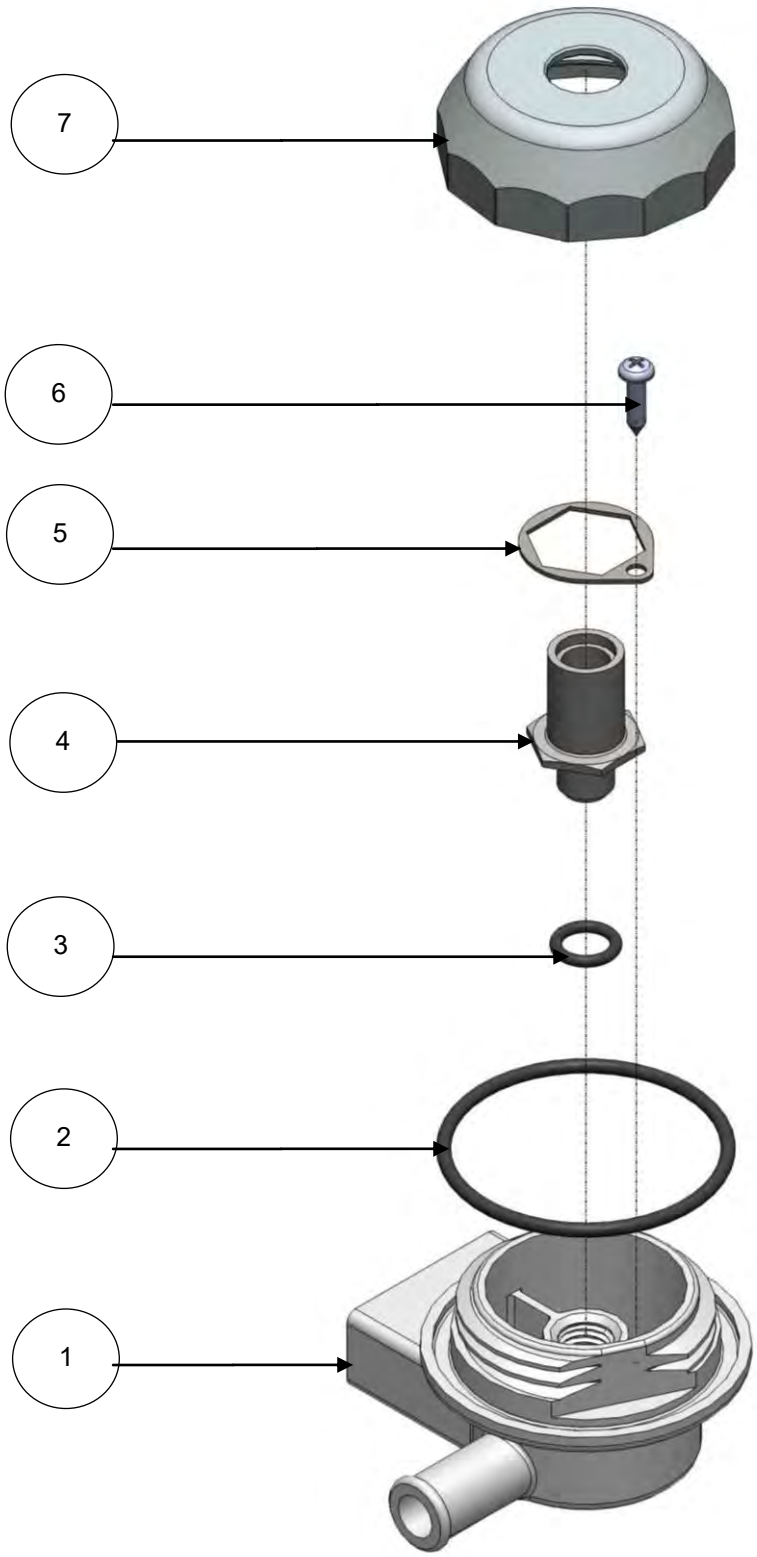

Centre Boss Assembly – Top

Item	Description	Part Number	Qty	Note
1	Centre boss (Top)	62003019	1	
2	O ring – Ø3mm x Ø47mm	300.3047	1	
3	O ring – Ø2.5mm x Ø10mm	300.2510	1	
4	Rinse arm spindle	60002987	1	
5	Fixing plate	61006076	1	
6	M3 x 16mm Long – Self tapping screw	2020305	1	
7	Lock nut	62003024	1	

Description	Part Number	Note
Centre Boss Assembly – Top	021.0006	Top – For Glass washer machine only.

Centre Boss

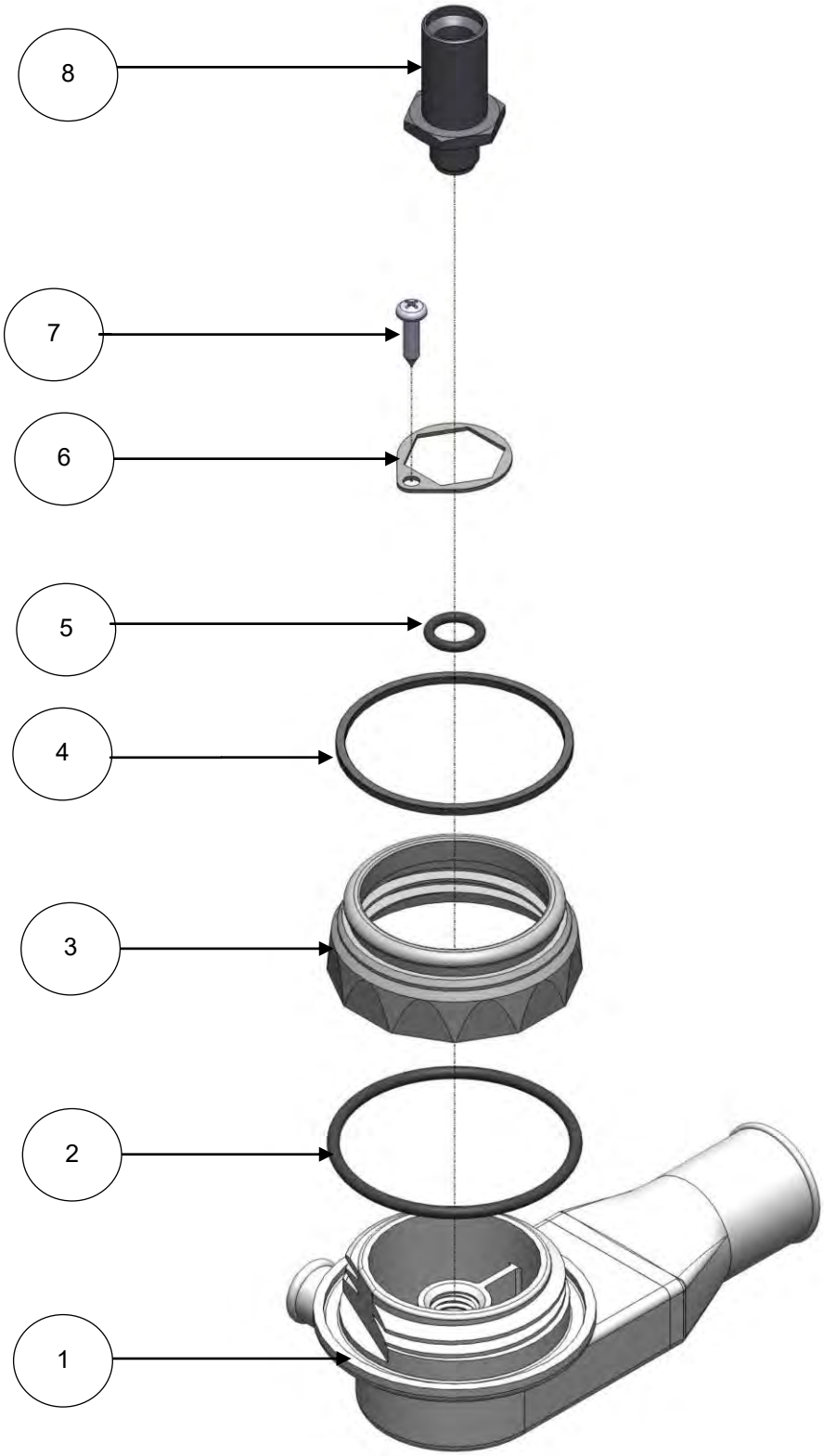

Centre Boss

Item	Description	Part Number	Qty	Note
1	Centre boss (bottom)	60004157	1	
2	O ring – Ø3mm x Ø47mm	300.3047	1	
3	Lock nut	60003005	1	
4	Seal	60003021	1	
5	O ring – Ø2.5mm x Ø10mm	300.2510	1	
6	Fixing plate	61006076	1	
7	M3 x 16mm Long – Self tapping screw	2020305	1	
8	Rinse arm spindle	60002987	1	

Description	Part Number	Note
Centre Boss Assembly	021.0005	Top & bottom

Rinse Arm

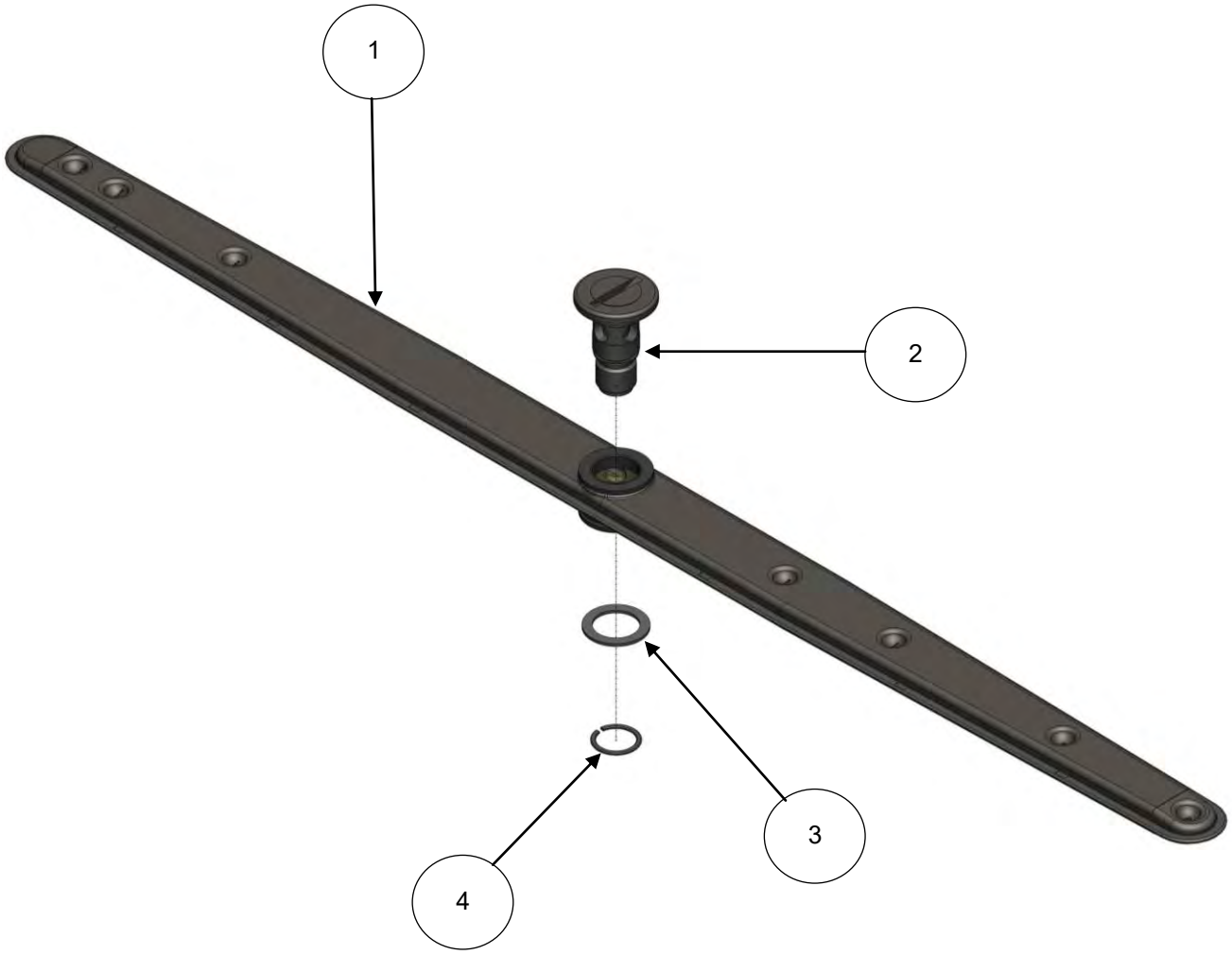

Rinse Arm

Item	Description	Part Number	Qty	Note
1	Rinse arm – 400mm	62003575	1	
2	Rinse arm screw	100.0019	1	
3	Washer	60003487	1	
4	Locking ring	60003023	1	

Description	Part Number	Note
400mm Rinse Arm – Complete Assembly	022.0001	As picture

Base – Non Air Break Machine

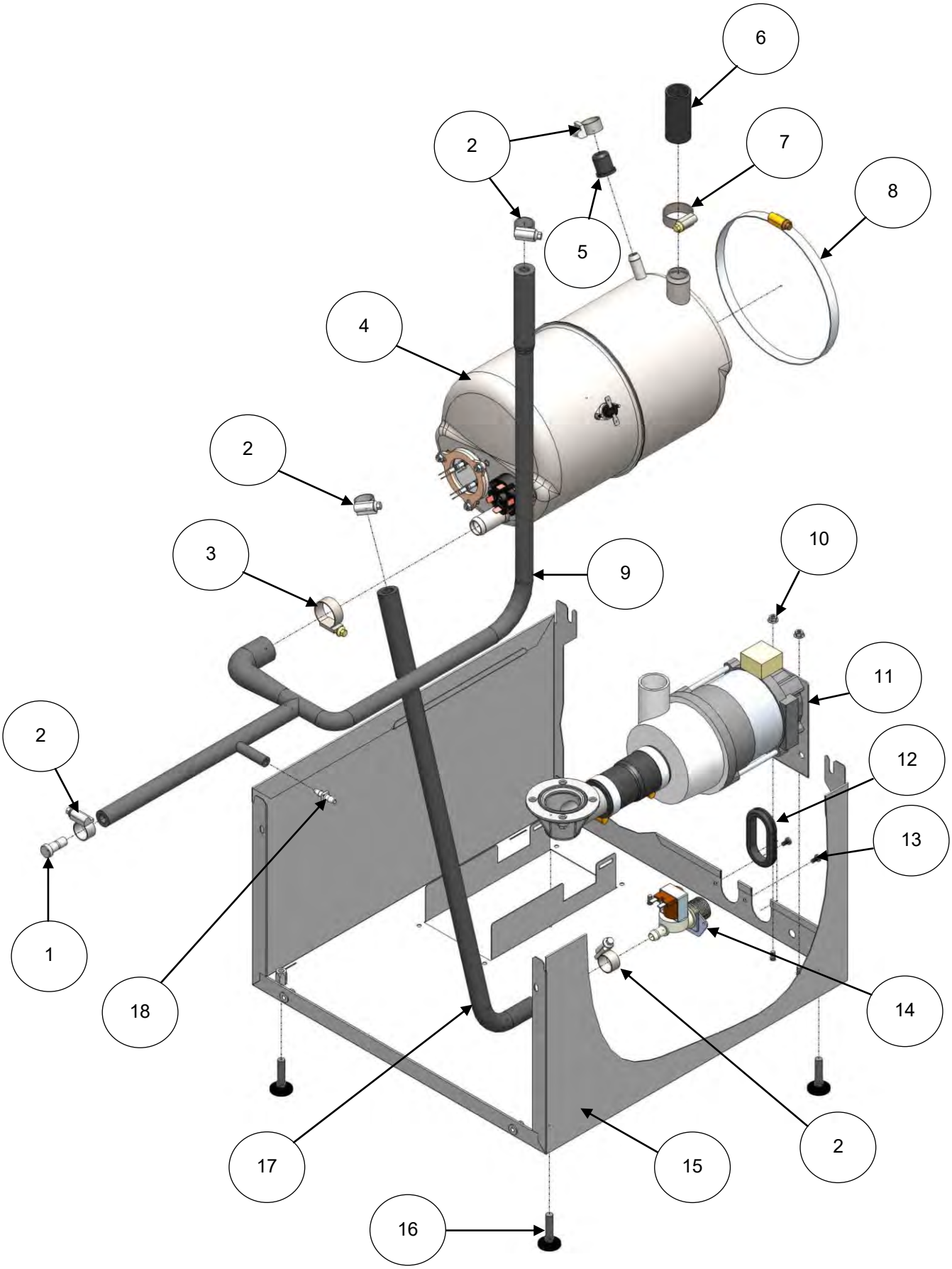

Base – Non Air Break Machine

Item	Description	Part Number	Qty	Note
1	Drain plug – Rinse tank	100.0003	1	
2	Jubilee clip – Ø12mm to Ø22mm	JCLIP-012-022	5	
3	Jubilee clip – Ø16mm to Ø27mm	JCLIP-016-027	1	
4	Rinse boiler – 6.5 litre x 2.6 kW	-	1	See page 36 – 37
5	End cap	410.0002	1	
6	Hose – Rinse system – 400mm	-	1	See page 22 – 23 & 24 - 25
7	Jubilee clip – Ø20mm to Ø32mm	JCLIP-020-032	1	
8	Jubilee clip – Ø160mm to Ø180mm	JCLIP–160-180	1	
9	Hose – Type B Air Break – Rinse boiler	401.0001	1	
10	M5 nut – Flange	FNUT-05	2	
11	Wash pump assembly – 0.22 kW	-	1	See page 38 – 39
12	Grommet 50mm	GROM-01		
13	M4 x 10mm long – Pan head screw	SC111	2	
14	Inlet solenoid valve	7.12.12/1	1	
15	Machine base – 400mm	-	1	Not available as spare
16	M8 x 40 Adjuster foot	310.0001	4	
17	Hose—Inlet solenoid to type B air break	401.0004	1	
18	6-4mm Inline reducing hose connector	7.7.21/11	1	
19	M6 nut – Flange	FNUT-06	1	Not shown (For Equi-Potential bonding stud)

Base – Air Break Machine

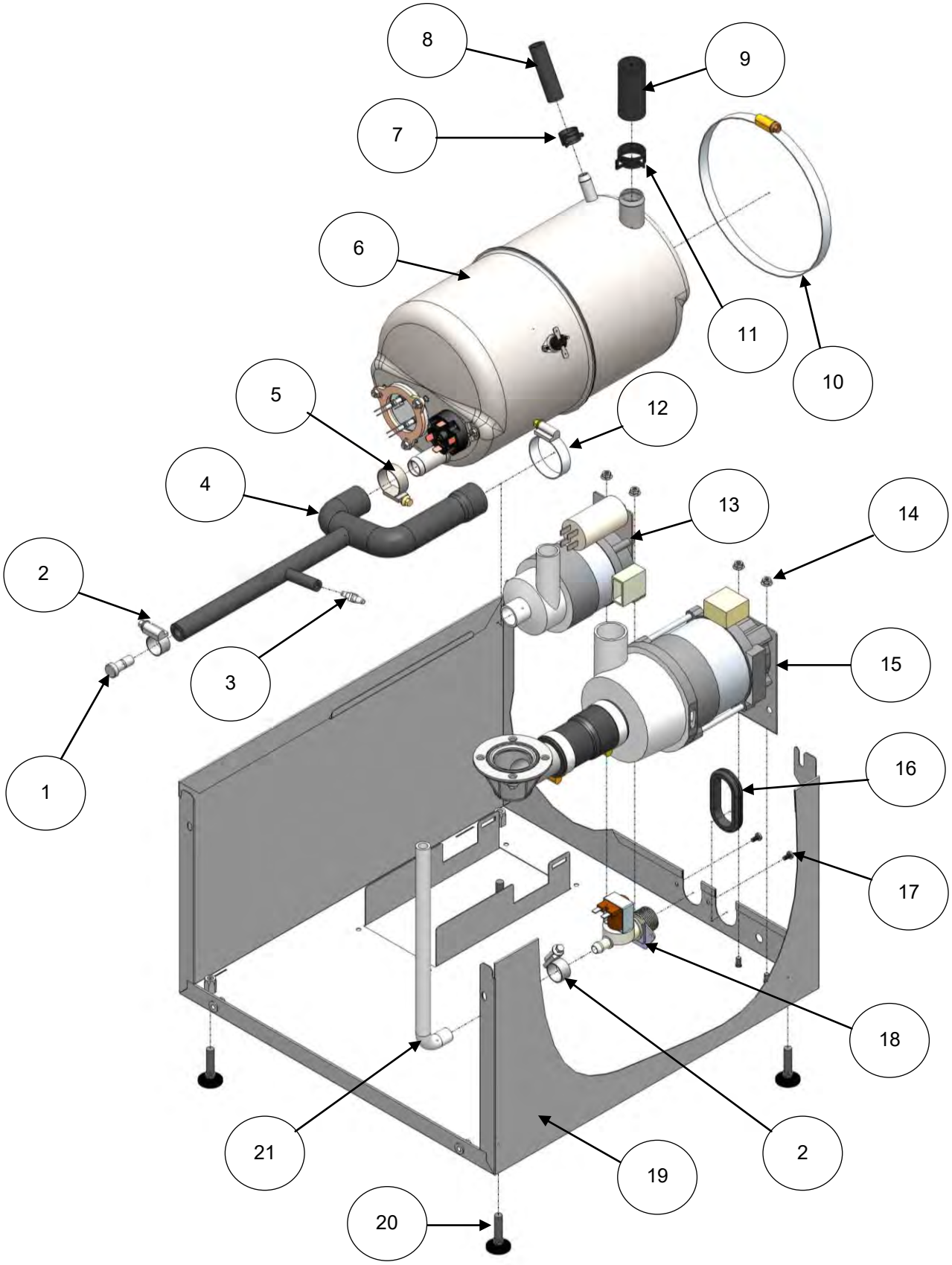

Base – Air Break Machine

Item	Description	Part Number	Qty	Note
1	Drain plug – Rinse tank	100.0003	1	
2	Jubilee clip – Ø12mm to Ø22mm	JCLIP-012-022	2	
3	6-4mm Inline reducing hose connector	7.7.21/11	1	
4	Hose – Rinse boiler – Rinse pump	403.0001	1	
5	Jubilee clip – Ø16mm to Ø27mm	JCLIP-016-027	1	
6	Rinse boiler – 6.5 litre x 2.6 kW	-	1	See page 36 – 37
7	Hose clip - Ø18mm	350.0001	1	
8	Air break to rinse boiler breather hose 400mm	-	1	See page 20 - 21
9	Air break to rinse boiler fill hose 400mm	-	1	See page 20 - 21
10	Jubilee clip – Ø160mm to Ø180mm	JCLIP–160-180	1	
11	Hose clip - Ø26mm	350.0002	1	
12	Jubilee clip – Ø30mm to Ø45mm	JCLIP-030-045	1	
13	Rinse pump	-	1	See page 40 – 41
14	M5 nut – Flange	FNUT-05	4	
15	Wash pump assembly – 0.22 kW	-	1	See page 38 – 39
16	Grommet 50mm	GROM-01		
17	M4 x 10mm long – Pan head screw	SC111	2	
18	Inlet solenoid valve	7.12.12/1	1	
19	Machine base – 400mm	-	1	
20	M8 x 40 Adjuster foot	310.0001	4	
21	Inlet solenoid to air break hose	-	1	See page 20 - 21
22	M6 nut – Flange	FNUT-06	1	Not shown (For Equi-Potential bonding stud)

Rinse Tank

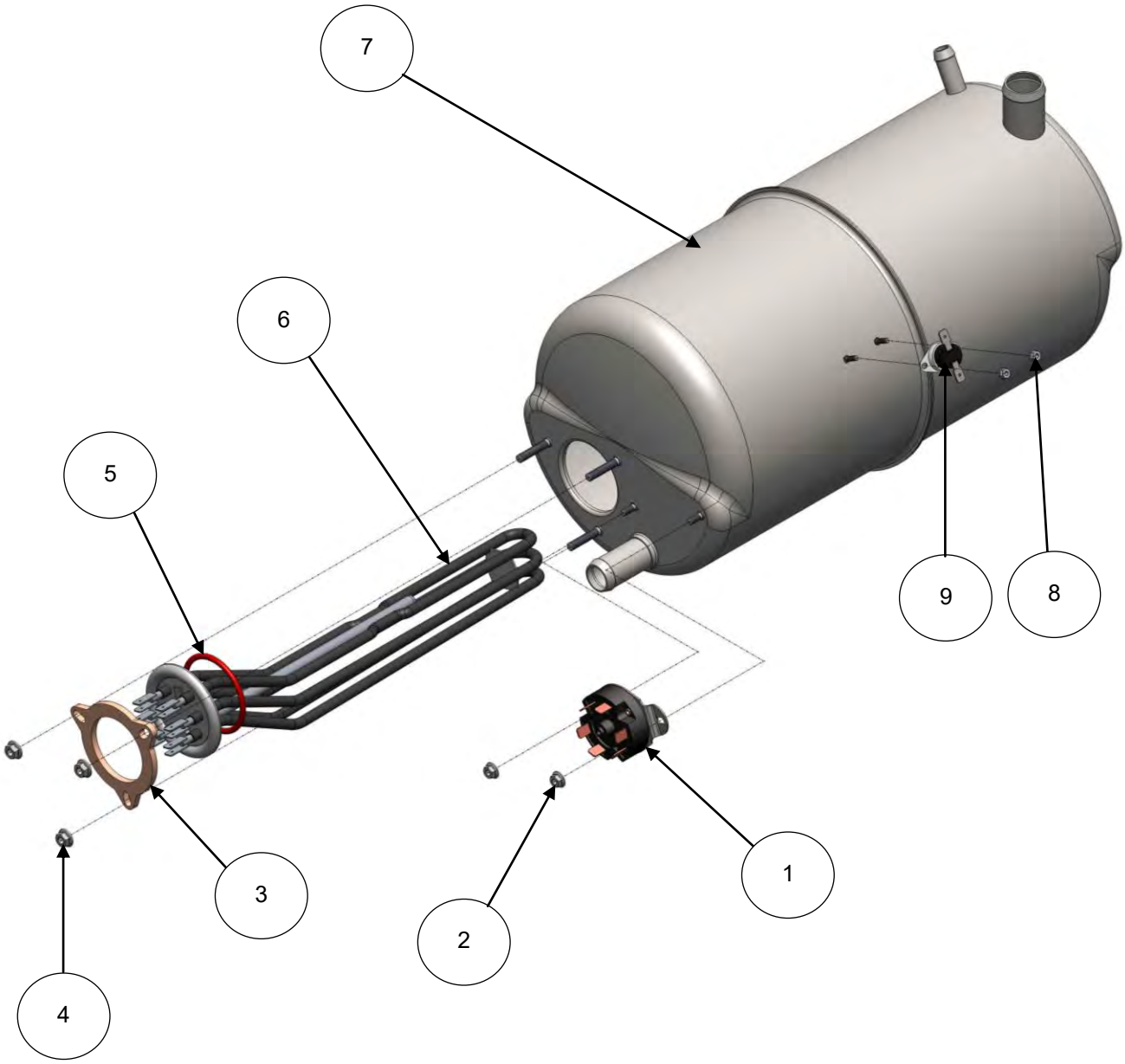

Rinse Tank

Item	Description	Part Number	Qty	Note
1	Manual reset thermal trip switch - 3 pole - 95ºC (normally closed)	540.0007	1	
2	M4 nut - Flange	FNUT-04	2	
3	Element bracket clamping ring	0117003	1	
4	M5 nut - Flange	FNUT-05	3	
5	O-ring seal - 6mm x 45mm	300.6045	1	
6	Rinse element - 2 x 1,300 watt	550.0003	1	
7	Rinse boiler - 6.5 litres	130.0002	1	
8	M3 nut - Flange	FNUT-03	2	
9	Auto reset thermal trip switch - 1 pole - 55ºC (normally open)	541.0002	1	

Description	Part Number	Note
Rinse boiler assembly - 6.5litres x 2,600 watts	013.0001-SK	

Wash Pump

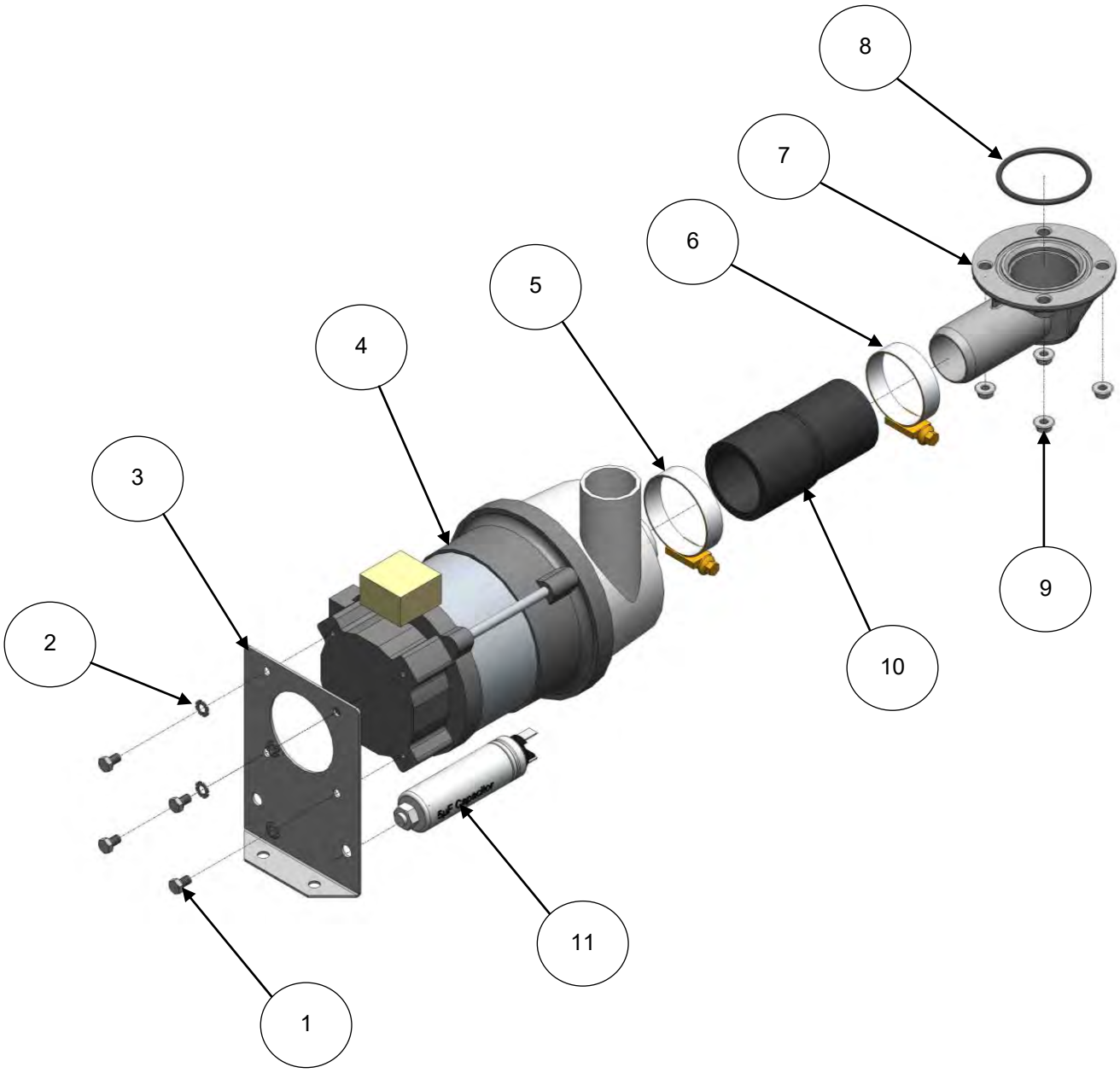

Wash Pump

Item	Description	Part Number	Qty	Note
1	M4 x 10mm - pozi socket head screw	SC109	4	
2	M4 star washer	7.9.13/3	4	
3	Bracket - Pump 0.22 kW	160.0001	1	
4	Wash pump - 0.22 kW	522.0001	1	
5	Jubilee clip - Ø35mm to Ø50mm	JCLIP-035-050	1	
6	Jubilee clip - Ø30mm to Ø45mm	JCLIP-030-045	1	
7	Wash & waste outlet	240.0002	1	
8	O-ring seal - Ø3mm x Ø47mm	300.3047	1	
9	M5 nut - Flange	FNUT-05	4	
10	Hose - Wash pump inlet	405.0001	1	
11	Capacitor - 5µF	529.0001	1	Includes washer & nut

Rinse Pump

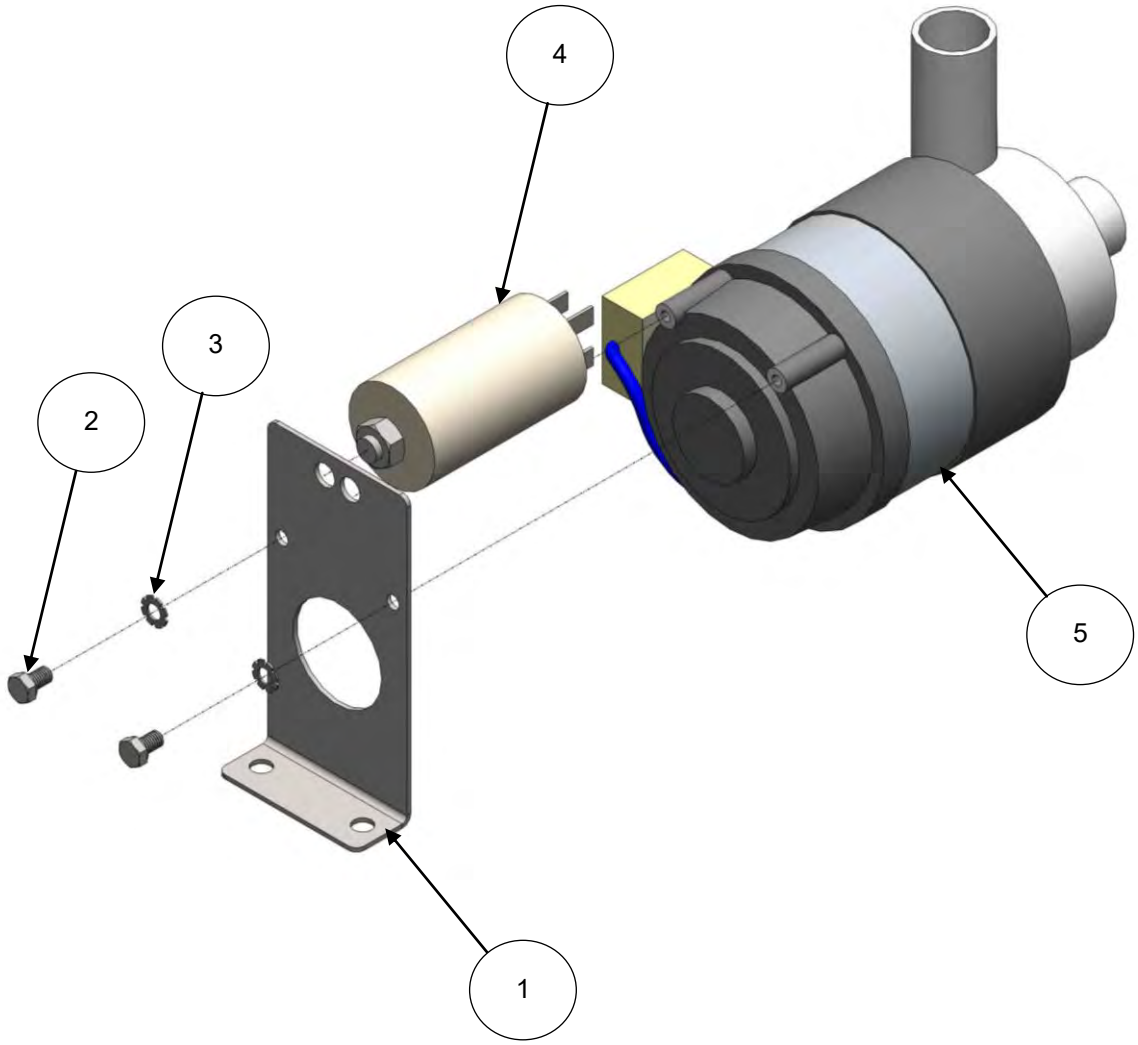

Rinse Pump

Item	Description	Part Number	Qty	Note
1	Bracket – Pump 0.12 kW	160.0001	1	
2	M4 x 10mm pozi socket head screw	SC109	2	
3	M4 Star washer	7.9.13/3	2	
4	Capacitor - 4µF	529.0002	1	Includes washer & nut
5	Rinse pump - 0.12 kW (50 Hz)	520.0001	1	

Drain Pump

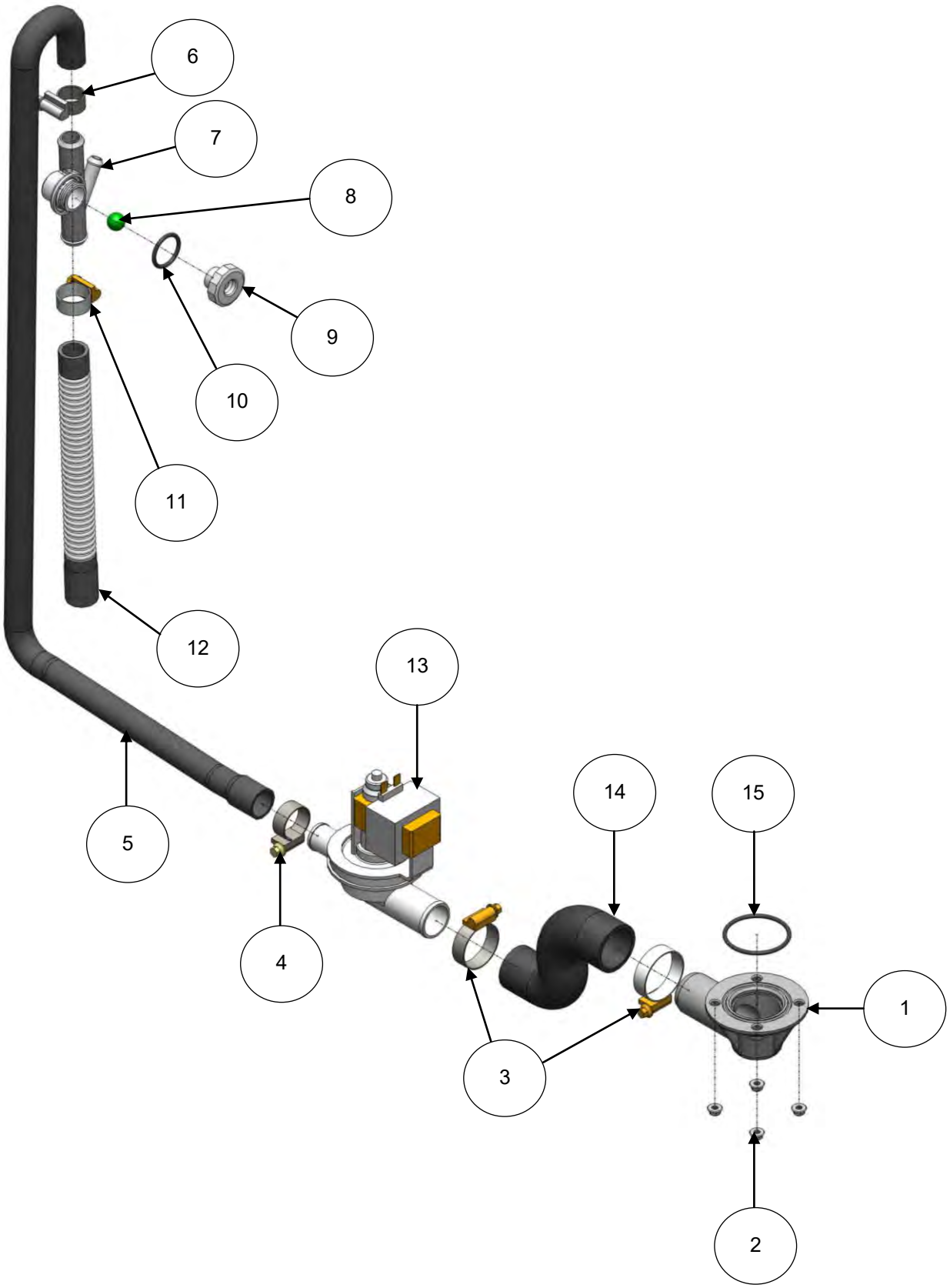

Drain Pump

Item	Description	Part Number	Qty	Note
1	Wash & waste outlet	240.0002	1	
2	M5 nut - Flange	FNUT-05	4	
3	Jubilee clip – Ø25mm to Ø40mm	JCLIP-025-040	2	
4	Jubilee clip –Ø16mm to Ø27mm	JCLIP-016-027	1	
5	Hose - Drain pump outlet	60004004	1	
6	Jubilee Clip - Ø12mm to Ø22mm	JCLIP-012-022	2	
7	Drain Air Break	60003586	1	
8	Ball	2801508	1	
9	Drain Air Break Nut	60003587	1	
10	Drain air break O-ring	2707066	1	
11	Jubilee Clip – Ø16mm to Ø27mm	JCLIP-016-027	1	
12	Drain Hose	DP-HOSE	1	
13	Drain pump	DP2	1	
14	Hose - Drain pump inlet	408.0001	1	
15	O-ring seal - Ø3mm x Ø47mm	300.3047	1	
16	Waste Hose Hook	DP-HOOK	1	Not shown

Gravity Drain

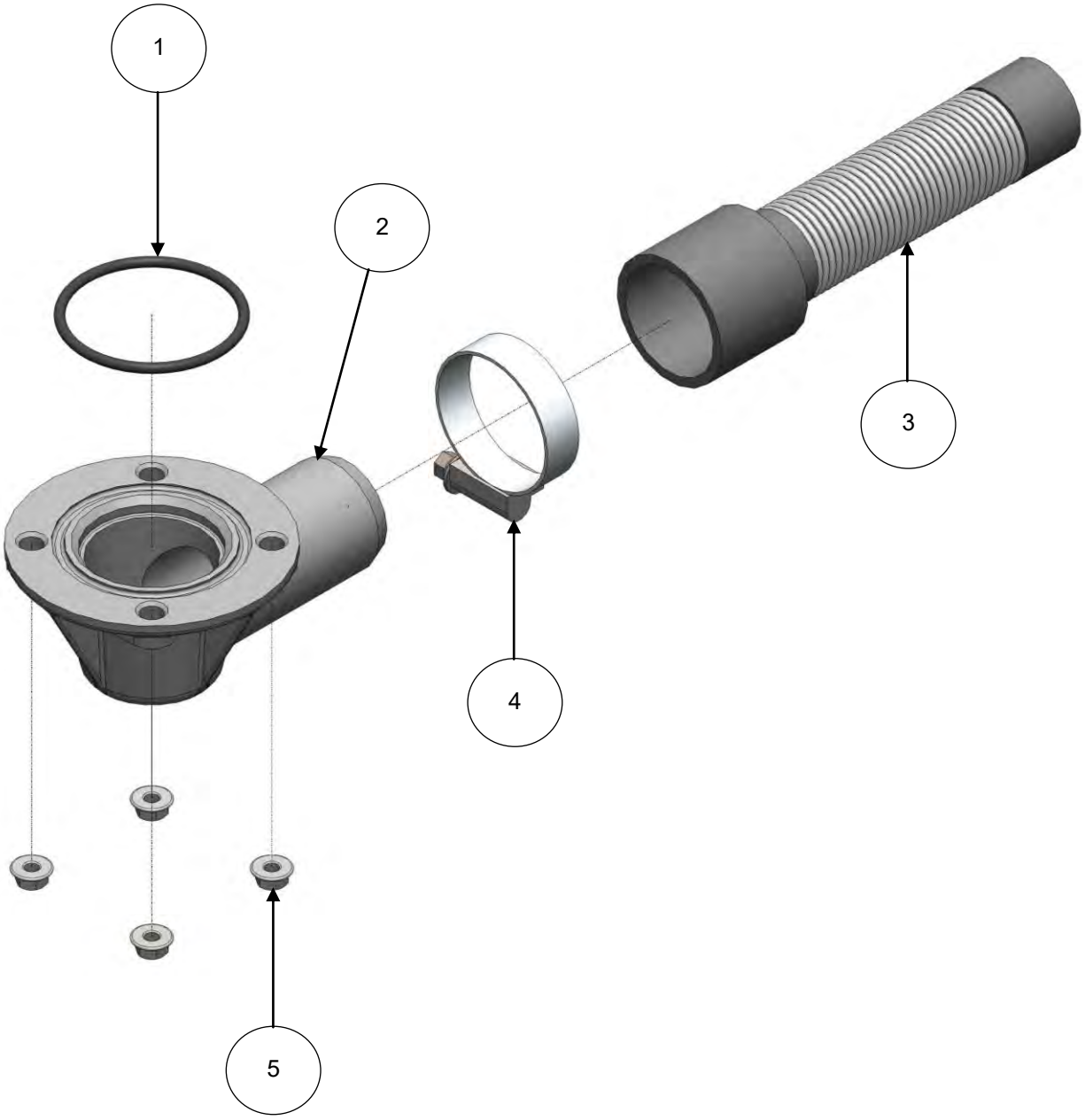

Gravity Drain

Item	Description	Part Number	Qty	Note
1	O-ring seal - Ø3mm x Ø47mm	300.3047	1	
2	Wash & waste outlet	240.0002	1	
3	Drain Hose	DP-HOSE	1	
4	Jubilee Clip – Ø30mm to Ø45mm	JCLIP-030-045	1	
5	M5 nut - Flange	FNUT-05	4	

Chemical Pumps

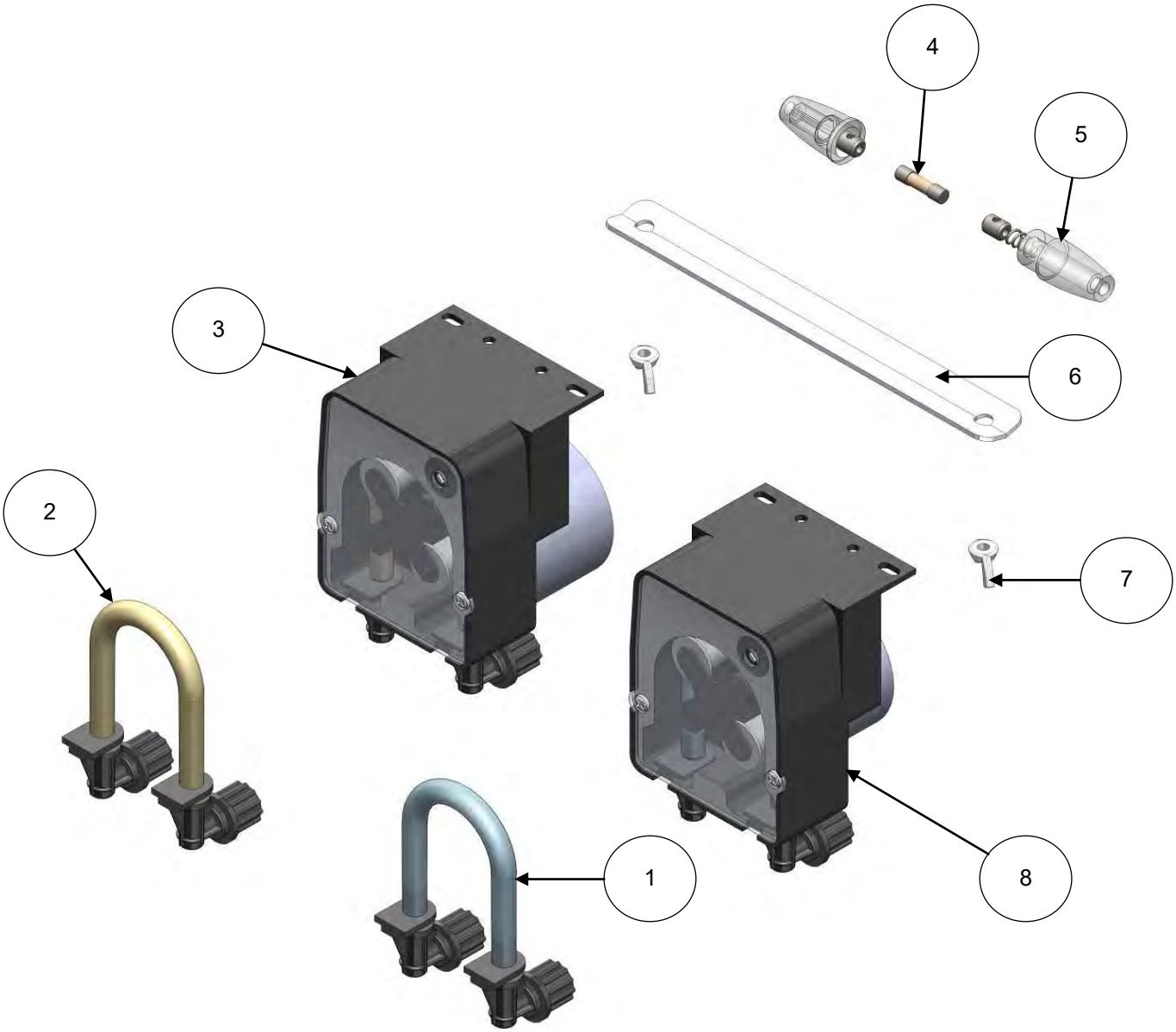

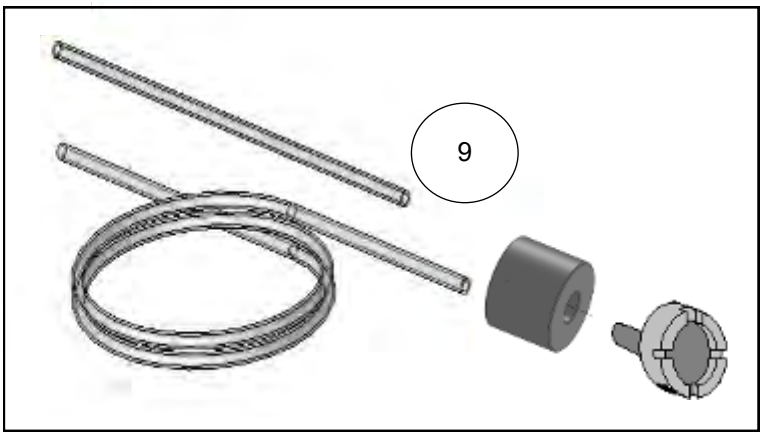

Chemical Pumps

Item	Description	Part Number	Qty.	Note
1	Rinse Aid Peristaltic Tube	052.2632	1	
2	Detergent Peristaltic Tube	052.2631	1	
3	Detergent pump only	526.0008	1	
4	1A time delay sand filled ceramic fuse	593.0002	1	
5	Inline fuse holder	594.0001	1	
6	Chemical Pump Bracket	160.0011	1	
7	M5 Wing Nut	WNUT-05	2	
8	Rinse aid pump only	526.0007	1	
9	Bottle Weight kit - Rinse Aid	526.0013	1	Blue Tube
	Bottle Weight kit- Detergent	526.0012	1	Clear Tube
10	Rinse aid hose	052.2632	1	Not shown
11	Detergent hose	052.2631	1	Not shown

Control Panel

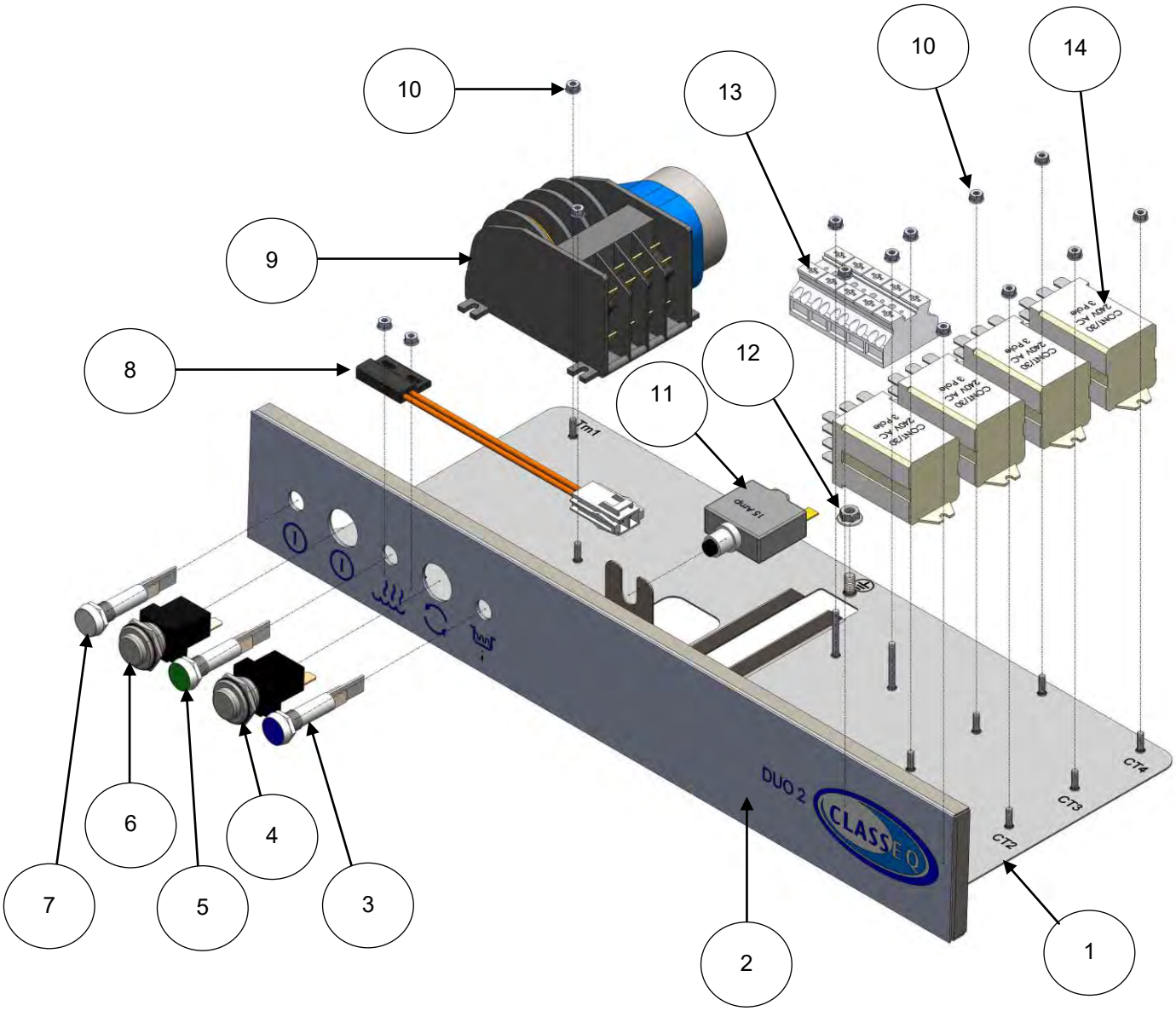

Control Panel

Item	Description	Part Number	Qty	Note
1	Control Panel - Single skin	140.0001	1	
	Control Panel - Double skin	140.0002		
2	Fascia label - Eco 2	940.0001	1	Gravity drain machine
		940.0018		Drain pump machine
	Fascia label - Hydro 400	940.1105		Gravity drain machine
		940.1104		Drain pump machine
	Fascia label - Duo 2	940.0003		
	Fascia label - Duo 400	940.1103		
3	Indicator lamp - Blue	505.0004	1	
4	Cycle switch (Momentary)	501.0001	1	
5	Indicator lamp - Green	505.0002	1	
6	On / Off switch (Latching)	500.0001	1	
7	Indicator lamp - White	505.0010	1	
8	Door switch	570.0001	1	
9	Cycle timer - 2 minute	560.3120	1	Glass washer
	Cycle timer - 3 minute	560.3180		Dish washer
10	M3 nut - Flange	FNUT-03	14	
11	Circuit breaker - 15 amp	TCB-04	1	Include nut & front plate
12	M5 nut - Flange	FNUT-05	1	
13	Terminal block	7.12.70	1	
14	Contactor – 3 pole changeover	CONT/30	3	Up to serial number XXXXX-1238
			4	After serial number XXXXX-1238
15	Wiring harness (not shown)	LM-P2-13A	1	Not shown
16	Mains cable - 13 amps + UK plug	7.12.10/PAC	1	Not shown
17	Earth mini loom	LM-P2-EML	1	Not shown

Panels

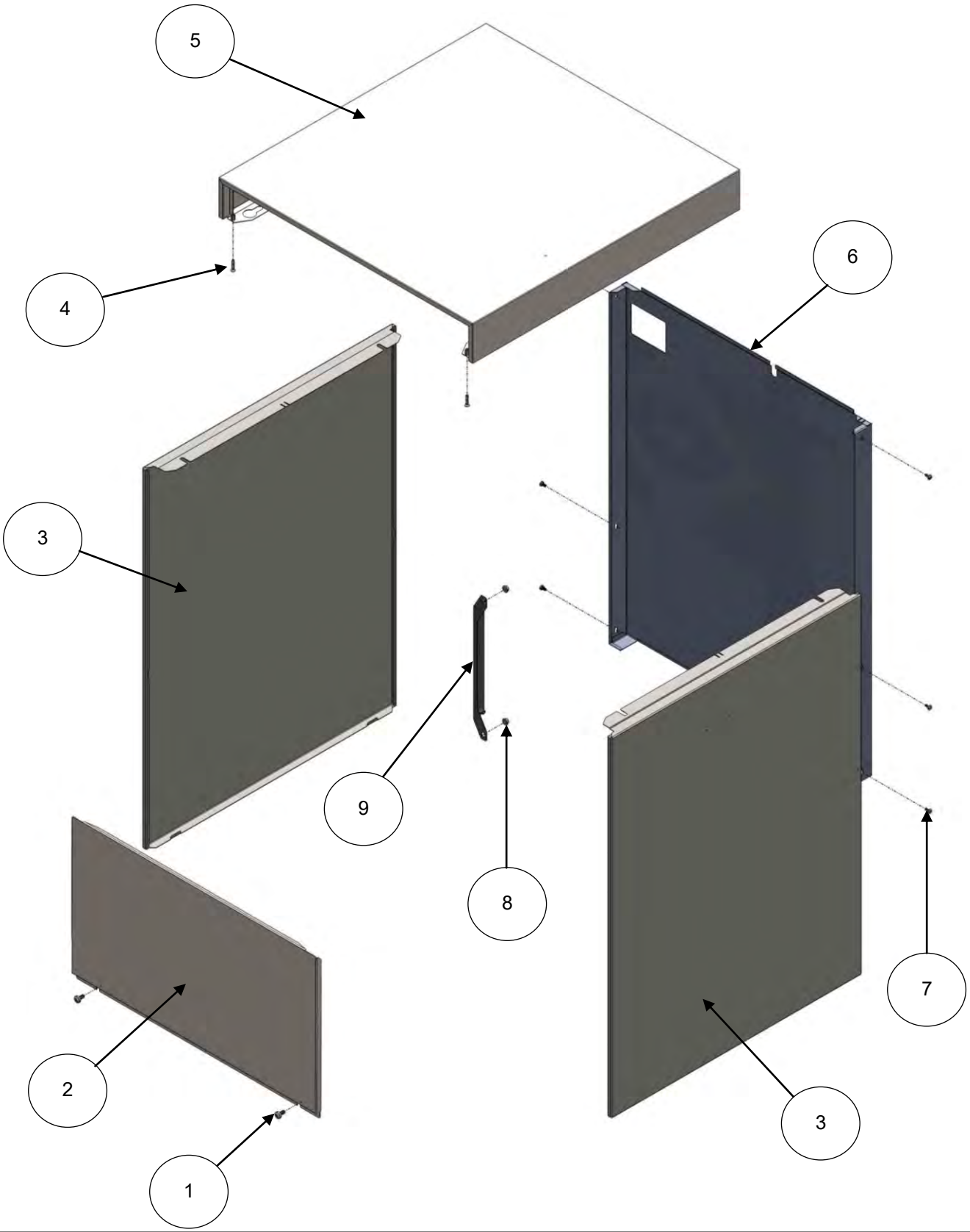

Panels

Item	Description	Part Number	Qty	Note
1	M6 x 12mm Button head screw	SC100	2	
2	Panel - Front lower	153.0001	1	
3	Side panels	151.0001	2	DUO machines only
4	M4 x 20mm Counter sunk screw	SC102	2	
5	Panel - Top single skin	154.0001	1	HYDRO and ECO machines only
	Panel - Top double skin	154.0002		DUO machines only
6	Rear panel – Double skin	150.0003	1	DUO machines only
	Rear panel – Single skin	150.0008		HYDRO and ECO machines only
7	Screw M4x10mm Pozi pan head	SC111	6	
8	M5 nut - Flange	FNUT-05	6	
9	Bracket - Cabinet to base	163.0002	2	
10	Mains cable grommet	GROM-12	1	Not shown

Accessories

Description	Part Number	Qty	Note
Water supply hose (WRAS approved)	7.8.14X	1	
Basket (glass) - 400mm²	500GBP	2	
Basket (dish) - 400mm²	500PRP	1	
Basket (cutlery)	CB	1	

Classic Glass & Dishwashing Systems Ltd
Winterhalter House
Roebuck Way
Knowlhill
Milton Keynes
MK5 8WH

ClassEq is a trading name of Classic Glass & Dishwashing Systems Ltd.

	☎	🖷	💻
Spares department	0844 225 9252	0870 224 7287	spares@classeq.co.uk
Service department	0844 225 9245	01908 359075	service@classeq.co.uk